MANUAL TRANSAXLE

SECTION MT

CONTENTS

RS5F70A

PREPARATION 4
Special Service Tools 4
Commercial Service Tools 5

RS5F50A

PREPARATION 7
Special Service Tools 7
Commercial Service Tools 8

RS5F70A, RS5F50A

NOISE, VIBRATION AND HARSHNESS (NVH) TROUBLESHOOTING 10
NVH Troubleshooting Chart 10
MANUAL TRANSAXLE 10

RS5F70A

M/T OIL 11
Changing M/T Oil 11
Checking 11
OIL LEAK AND OIL LEVEL 11

RS5F50A

M/T OIL 12
Changing M/T Oil 12
Checking 12
OIL LEAK AND OIL LEVEL 12

RS5F70A, RS5F50A

DESCRIPTION 13
Cross-sectional View - RS5F70A 13
Cross-sectional View - RS5F50A 14
DOUBLE-CONE SYNCHRONIZER 15
ON-VEHICLE SERVICE 16
Replacing Oil Seal 16
DIFFERENTIAL OIL SEAL 16
STRIKING ROD OIL SEAL 16
Position Switch Check 17
BACK-UP LAMP SWITCH 17
PNP SWITCH 17
BACK-UP LAMP SWITCH AND PNP SWITCH 18

RS5F70A

REMOVAL AND INSTALLATION 19
Removal 19
Installation 20
MODEL QG18DE ENGINE 20

RS5F50A

REMOVAL AND INSTALLATION 21
Removal 21
Installation 23
MODEL YD ENGINE 23

RS5F70A, RS5F50A

TRANSAXLE GEAR CONTROL 24
Components 24

RS5F70A

OVERHAUL 25
Case Components 25
Gear Components 26
Shift Control Components 27
Final Drive Components 28
DISASSEMBLY 29
Transaxle Case 29
Clutch Housing 31
REPAIR FOR COMPONENT PARTS 35
Input Shaft and Gears 35
DISASSEMBLY 35
INSPECTION 36
ASSEMBLY 37

CONTENTS (Cont'd)

Mainshaft and Gears 40
DISASSEMBLY.....40
INSPECTION.....41
ASSEMBLY 43
Final Drive.....48
PRE-INSPECTION 48
DISASSEMBLY.....49
INSPECTION.....49
ASSEMBLY 50
Shift Control Components 51
INSPECTION.....51
ASSEMBLY.....53
Clutch Housing 53
Transaxle Case.....57

RS5F50A

OVERHAUL 63
Case Components.....63
Gear Components 64
Shift Control Components 65
DISASSEMBLY.....66
REPAIR FOR COMPONENT PARTS 69
Input Shaft and Gears 69
DISASSEMBLY.....69
INSPECTION.....70
ASSEMBLY 71
Mainshaft and Gears 74
DISASSEMBLY.....74
INSPECTION.....75
ASSEMBLY 76
Final Drive.....78
DISASSEMBLY.....78
INSPECTION.....78
ASSEMBLY 79
Shift Control Components 80
INSPECTION.....80
Case Components.....80
REMOVAL AND INSTALLATION.....80
ADJUSTMENT.....82
Input Shaft End Play and Differential Side Bearing Preload.....82
DIFFERENTIAL SIDE 82
INPUT SHAFT SIDE.....83
Mainshaft Bearing Preload 83
ASSEMBLY.....85

RS5F70A

SERVICE DATA AND SPECIFICATIONS (SDS) 89
General Specifications.....89
TRANSAXLE 89
FINAL GEAR 89
Gear End Play 90
Clearance Coupling Sleeve.....90
1ST, 2ND, 3RD, 4TH, 5TH & REVERSE COUPLING SLEEVE 90
Clearance Between Baulk Ring and Gear 90
3RD, 4TH, 5TH, REVERSE BAULK RING.....90
1ST AND 2ND DOUBLE BAULK RING 90
Available Snap Rings 91
SNAP RING.....91
Available C-rings.....91
4TH INPUT GEAR C-RING 91
5TH INPUT GEAR REAR C-RING.....91
MAINSHAFT C-RING 92
Available Adjusting Shims 93
INPUT SHAFT REAR BEARING ADJUSTING SHIM 93
MAINSHAFT ADJUSTING SHIM.....94
MAINSHAFT REAR BEARING ADJUSTING SHIM 94
Available Thrust Washer.....95
MAINSHAFT THRUST WASHER.....95
Available Washers 95
DIFFERENTIAL SIDE GEAR THRUST WASHER.....95
Available Shims - Differential Side Bearing Preload and Adjusting Shim 96
BEARING PRELOAD 96
DIFFERENTIAL SIDE BEARING ADJUSTING SHIMS 96

RS5F50A

SERVICE DATA AND SPECIFICATIONS (SDS) 97
General Specifications.....97
TRANSAXLE 97
FINAL GEAR 97
Gear End Play 98
Clearance Between Baulk Ring and Gear 98
3RD, 4TH & 5TH BAULK RING.....98
1ST AND 2ND DOUBLE BAULK RING 98
REVERSE BAULK RING 98
Available Snap Rings 99
1ST & 2ND SYNCHRONIZER HUB (AT MAINSHAFT).....99
3RD & 4TH SYNCHRONIZER HUB (AT INPUT SHAFT).....99
5TH MAIN GEAR (AT MAINSHAFT).....99
Available Thrust Washer.....99
4TH INPUT GEAR (AT INPUT SHAFT).....99
DIFFERENTIAL SIDE GEAR THRUST WASHER.....99
Available Shims 100
BEARING PRELOAD AND END PLAY 100
TOTAL TURNING TORQUE (NEW BEARING) 100
MAINSHAFT BEARING ADJUSTING SHIM 100
TABLE FOR SELECTING MAINSHAFT BEARING ADJUSTING SHIM(S).....100
INPUT SHAFT BEARING ADJUSTING SHIM 101
TABLE FOR SELECTING INPUT SHAFT BEARING ADJUSTING SHIM(S).....101

CONTENTS (Cont'd)

DIFFERENTIAL SIDE BEARING ADJUSTING SHIM 101
TABLE FOR SELECTING DIFFERENTIAL SIDE BEARING ADJUSTING SHIM(S) 102

Special Service Tools

NLMT0032

Tool number Tool name	Description	
KV38107700 Preload adapter	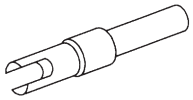 NT087	Measuring turning torque of final drive assembly Measuring total turning torque Measuring clearance between side gear and differential case with washer Selecting differential side bearing adjusting shim (Use with KV38106000.)
KV38106000 Height gauge adapter (differential side bearing)	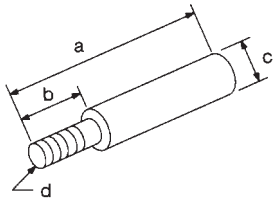 \ NT418	Selecting differential side bearing adjusting shim (Use with KV38107700.) **a: 140 mm (5.51 in)** **b: 40 mm (1.57 in)** **c: 16 mm (0.63 in) dia.** **d: M8 x 1.25P**
KV32101000 Pin punch	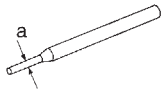 \ NT410	Removing and installing retaining pin Removing and installing lock pin Removing selector shaft Removing welch plug **a: 4 mm (0.16 in) dia.**
KV31100300 Pin punch	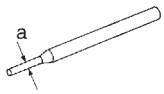 \ NT410	Removing and installing retaining pin **a: 4.5 mm (0.177 in) dia.**
ST30031000 Puller	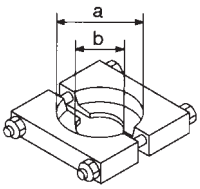 \ NT411	Removing 3rd, 5th input gear Removing 3rd & 4th and 5th & Rev synchronizer hub Removing mainshaft rear bearing Removing 2nd gear, 5th gear bush Removing 1st & 2nd synchronizer hub, 1st and 4th main gear Removing and installing differential side bearing **a: 90 mm (3.54 in) dia.** **b: 50 mm (1.97 in) dia.**
ST30021000 Puller	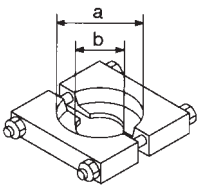 \ NT411	Removing input shaft front and rear bearing Installing input shaft front and rear bearing Installing 5th input gear, 3rd main gear and 4th main gear Installing 1st & 2nd, 3rd & 4th and 5th & Rev synchronizer hub Installing 2nd gear bush, 5th gear bush, Rev gear bush Installing mainshaft rear bearing **a: 110 mm (4.33 in) dia.** **b: 68 mm (2.68 in) dia.**

Tool number Tool name	Description	
ST33290001 Puller	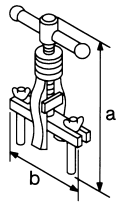 NT414	Removing idler gear bearing outer race **a: 250 mm (9.84 in)** **b: 160 mm (6.30 in)**
ST33230000 Drift	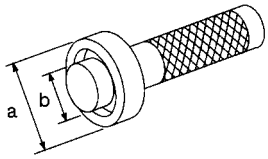 NT084	Removing differential oil seal Installing differential side bearing **a: 51 mm (2.01 in) dia.** **b: 28.5 mm (1.122 in) dia.**
ST30720000 Drift	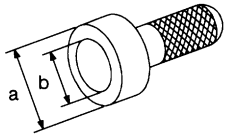 NT115	Installing differential side bearing outer race **a: 77 mm (3.03 in) dia.** **b: 55.5 mm (2.185 in) dia.**
ST22350000 Drift	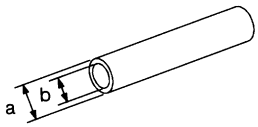 NT065	Installing input shaft front and rear bearing **a: 34 mm (1.34 in) dia.** **b: 28 mm (1.10 in) dia.**
ST22452000 Drift	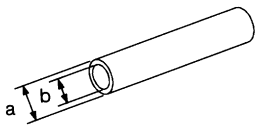 NT065	Installing 3rd and 4th main gear Installing 5th gear bush Installing 5th & Rev synchronizer hub Installing Rev gear bush Installing mainshaft rear bearing **a: 45 mm (1.77 in) dia.** **b: 36 mm (1.42 in) dia.**
ST37750000 Drift	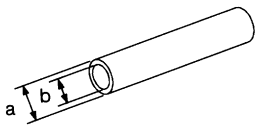 NT065	Installing input shaft oil seal Installing 5th synchronizer Installing mainshaft rear bearing Installing 5th main gear Installing 3rd & 4th synchronizer hub Installing striking rod oil seal Installing clutch housing dust seal **a: 40 mm (1.57 in) dia.** **b: 31 mm (1.22 in) dia.**

Commercial Service Tools

NLMT0033

Tool name	Description	
Drift	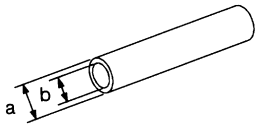 NT065	Installing welch plug **a: 12 mm (0.47 in) dia.** **b: 10 mm (0.39 in) dia.**

Commercial Service Tools (Cont'd)

Tool name	Description	
Drift	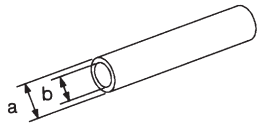 NT065	Removing input shaft rear bearing Removing mainshaft rear bearing **a: 22 mm (0.87 in) dia.** **b: 16 mm (0.63 in) dia.**
Drift	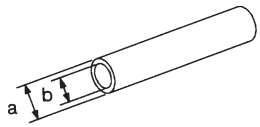 NT065	Installing differential oil seal **a: 58 mm (2.28 in) dia.** **b: 50 mm (1.97 in) dia.**
Drift	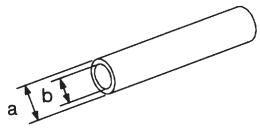 NT065	Installing differential oil seal **a: 54 mm (2.13 in) dia.** **b: 50 mm (1.97 in) dia.**
Drift	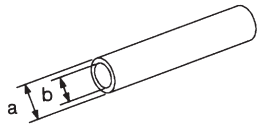 NT065	Installing 2nd gear bush **a: 38 mm (1.50 in) dia.** **b: 33 mm (1.30 in) dia.**
Drift	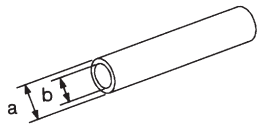 NT065	Installing 3rd & 4th and 1st & 2nd synchronizer hub Installing mainshaft front bearing **a: 50 mm (1.97 in) dia.** **b: 41 mm (1.61 in) dia.**
Drift	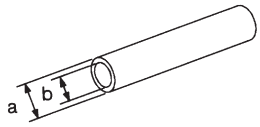 NT065	Installing input shaft oil seal Installing 5th input gear **a: 39 mm (1.54 in) dia.** **b: 30 mm (1.18 in) dia.**

Special Service Tools

NLMT0001

Tool number Tool name	Description	
KV38105210 Preload adapter	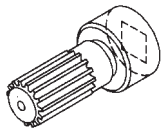 NT075	Measuring turning torque of final drive assembly Measuring total turning torque
KV32101000 Pin punch	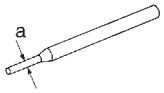 NT410	Removing and installing retaining pin **a: 4 mm (0.16 in) dia.**
ST22730000 Puller	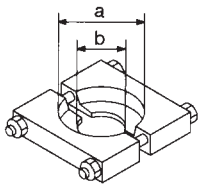 NT411	Removing mainshaft front and rear bearing inner race **a: 82 mm (3.23 in) dia.** **b: 30 mm (1.18 in) dia.**
ST30031000 Puller	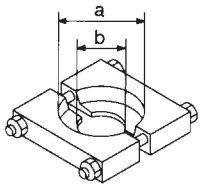 NT411	Removing input shaft front and rear bearing Removing 4th & 5th main gear **a: 90 mm (3.54 in) dia.** **b: 50 mm (1.97 in) dia.**
ST30021000 Puller	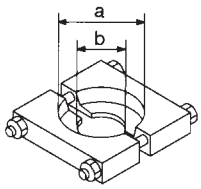 NT411	Removing 5th synchronizer Removing 3rd & 4th synchronizer Removing 2nd & 3rd main gear **a: 110 mm (4.33 in) dia.** **b: 68 mm (2.68 in) dia.**
ST3306S001 Differential side bearing puller set 1 ST33051001 Puller 2 ST33061000 Adapter	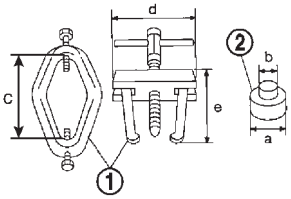 NT675	Removing differential side bearing inner race **a: 38 mm (1.50 in) dia.** **b: 28.5 mm (1.122 in) dia.** **c: 130 mm (5.12 in)** **d: 135 mm (5.31 in)** **e: 100 mm (3.94 in)**
ST33290001 Puller	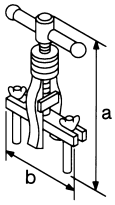 NT414	Removing differential oil seal Removing mainshaft rear bearing outer race Removing differential side bearing outer race **a: 250 mm (9.84 in)** **b: 160 mm (6.30 in)**

Special Service Tools (Cont'd)

Tool number Tool name	Description	
ST33400001 Drift	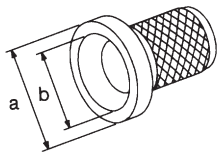 NT086	Installing differential oil seal **a: 60 mm (2.36 in) dia.** **b: 47 mm (1.85 in) dia.**
ST30600000 Drift	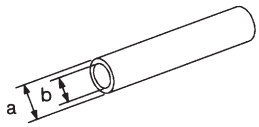 NT065	Installing input shaft front bearing **a: 36 mm (1.42 in) dia.** **b: 31 mm (1.22 in) dia.**
ST22452000 Drift	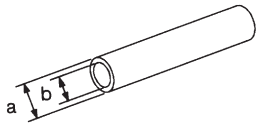 NT065	Installing 3rd, 4th and 5th main gear **a: 45 mm (1.77 in) dia.** **b: 36 mm (1.42 in) dia.**
ST30621000 Drift	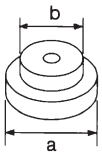 NT073	Installing mainshaft rear bearing outer race (Use with ST30611000.) **a: 79 mm (3.11 in) dia.** **b: 59 mm (2.32 in) dia.**
ST30611000	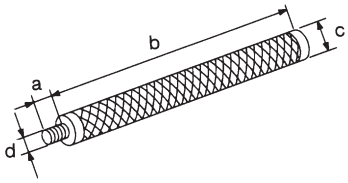 NT419	(Use with ST30621000.) **a: 15 mm (0.59 in)** **b: 335 mm (13.19 in)** **c: 25 mm (0.98 in) dia.** **d: M12 x 1.5P**
KV38107700 Preload adapter	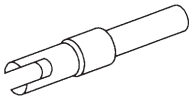 NT087	Measuring clearance between side gear and differential case with washer
KV38106500 Preload adapter	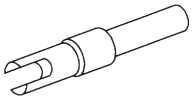 NT087	Measuring turning torque of final drive assembly

Commercial Service Tools

NLMT0002

Tool name	Description	
Drift	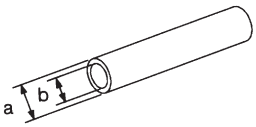 NT065	Installing differential side bearing inner race **a: 45 mm (1.77 in) dia.** **b: 41 mm (1.61 in) dia.**

Tool name	Description	
Drift	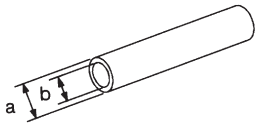 NT065	Installing differential side bearing outer race **a: 69 mm (2.72 in) dia.** **b: 64 mm (2.52 in) dia.**
Drift	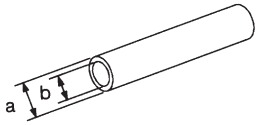 NT065	Installing striking rod oil seal **a: 38 mm (1.50 in) dia.** **b: 20 mm (0.79 in) dia.**

NVH Troubleshooting Chart

NLMT0003S01

Use the chart below to help you find the cause of the symptom. The numbers indicate the order of the inspection. If necessary, repair or replace these parts.

MANUAL TRANSAXLE

NLMT0003S0101

Reference page		MT-11 (RS5F70A), MT-12 (RS5F50A)	MT-11 (RS5F70A), MT-12 (RS5F50A)	MT-11 (RS5F70A), MT-12 (RS5F50A)	MT-25 (RS5F70A), MT-63 (RS5F50A)	MT-25 (RS5F70A), MT-63 (RS5F50A)	MT-25 (RS5F70A), MT-63 (RS5F50A)	MT-24	MT-27 (RS5F70A), MT-65 (RS5F50A)	MT-27 (RS5F70A), MT-65 (RS5F50A)	MT-26 (RS5F70A), MT-64 (RS5F50A)	MT-26 (RS5F70A), MT-64 (RS5F50A)	MT-26 (RS5F70A), MT-64 (RS5F50A)	MT-26 (RS5F70A), MT-64 (RS5F50A)
SUSPECTED PARTS (Possible cause)		(Oil level is low.)	(Wrong oil)	(Oil level is high.)	GASKET (Damaged)	OIL SEAL (Worn or damaged)	O-RING (Worn or damaged)	SHIFT CONTROL ROD (Worn)	CHECK PLUG RETURN SPRING AND CHECK BALL (Worn or damaged)	SHIFT FORK (Worn)	GEAR (Worn or damaged)	BEARING (Worn or damaged)	BAULK RING (Worn or damaged)	INSERT SPRING (Damaged)
Symptoms	Noise	1	2								3	3		
	Oil leakage		3	1	2	2	2							
	Hard to shift or will not shift		1	1				2					3	3
	Jumps out of gear							1	2	3	3			

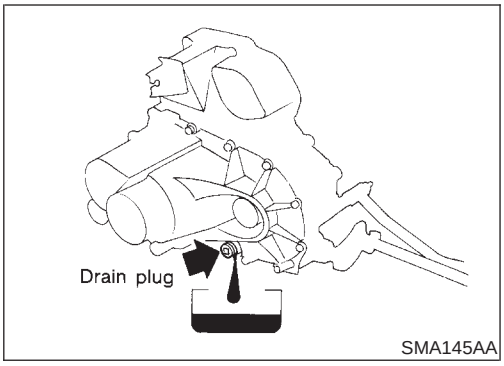

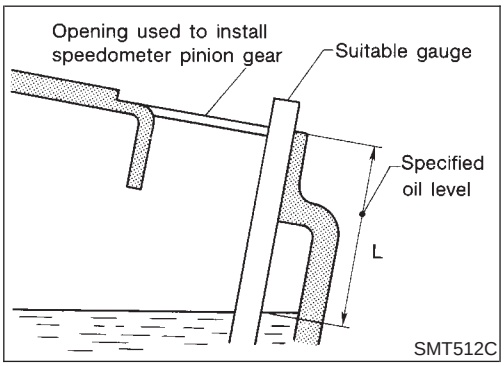

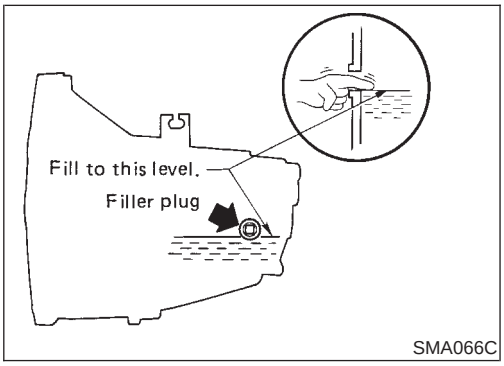

Changing M/T Oil

NLMT0086

1. Drain oil from drain plug and refill with new gear oil.
2. Check oil level.

Oil grade:

API GL-4

Viscosity:

Refer to MA-20, "RECOMMENDED FLUIDS AND LUBRICANTS".

Capacity:

RS5F70A 3.0 ℓ (5-1/4 Imp pt)

Oil level (Reference data):

RS5F70A 75.5 - 80.5 mm (2.972 - 3.169 in)

Drain plug:

: 25 - 34 N·m (2.5 - 3.5 kg-m, 18 - 25 ft-lb)

Checking

NLMT0087

OIL LEAK AND OIL LEVEL

NLMT0087S01

1. Check that oil is not leaking from transaxle or around it.
2. Check oil level.

Never start engine while checking oil level.

Filler plug:

: 10 - 19 N·m (1.0 - 2.0 kg-m, 87 - 173 in-lb)

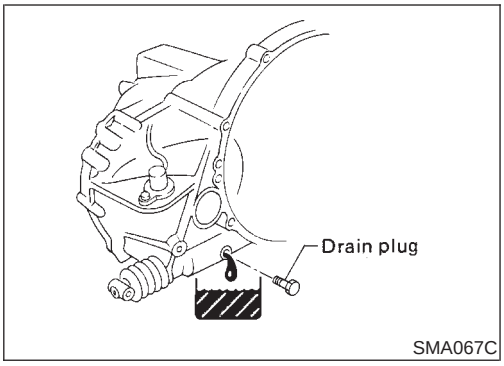

Changing M/T Oil

NLMT0088

1. Drain oil from drain plug and refill with new gear oil.
2. Check oil level.

Oil grade:

API GL-4

Viscosity:

Refer to MA-20, "RECOMMENDED FLUIDS AND LUBRICANTS".

Capacity:

RS5F50A 4.5 - 4.8 ℓ (7-7/8 - 8-1/2 Imp pt)

Drain plug:

: 15 - 20 N·m (1.5 - 2.0 kg-m, 11 - 14 ft-lb)

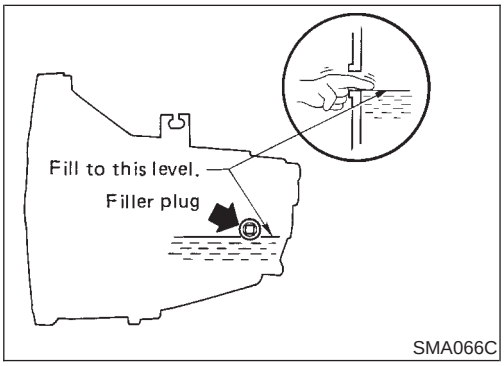

Checking

NLMT0089

OIL LEAK AND OIL LEVEL

NLMT0089S01

Check for oil leakage and oil level.

Never start engine while checking oil level.

Filler plug:

: 25 - 34 N·m (2.5 - 3.5 kg-m, 18 - 25 ft-lb)

Cross-sectional View — RS5F70A

NLMT0034S03

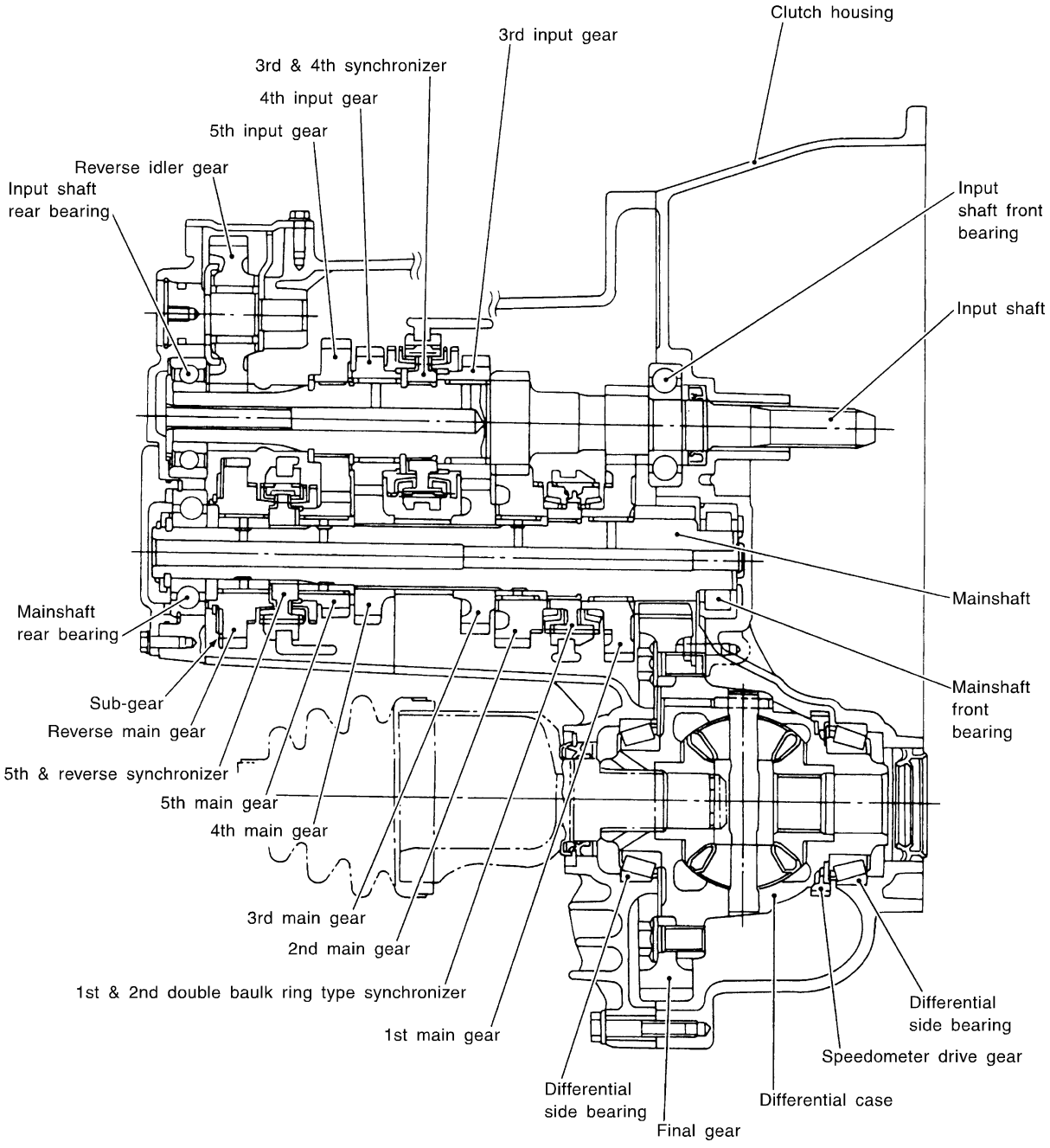

SMT924D

Cross-sectional View — RS5F50A

NLMT0034S04

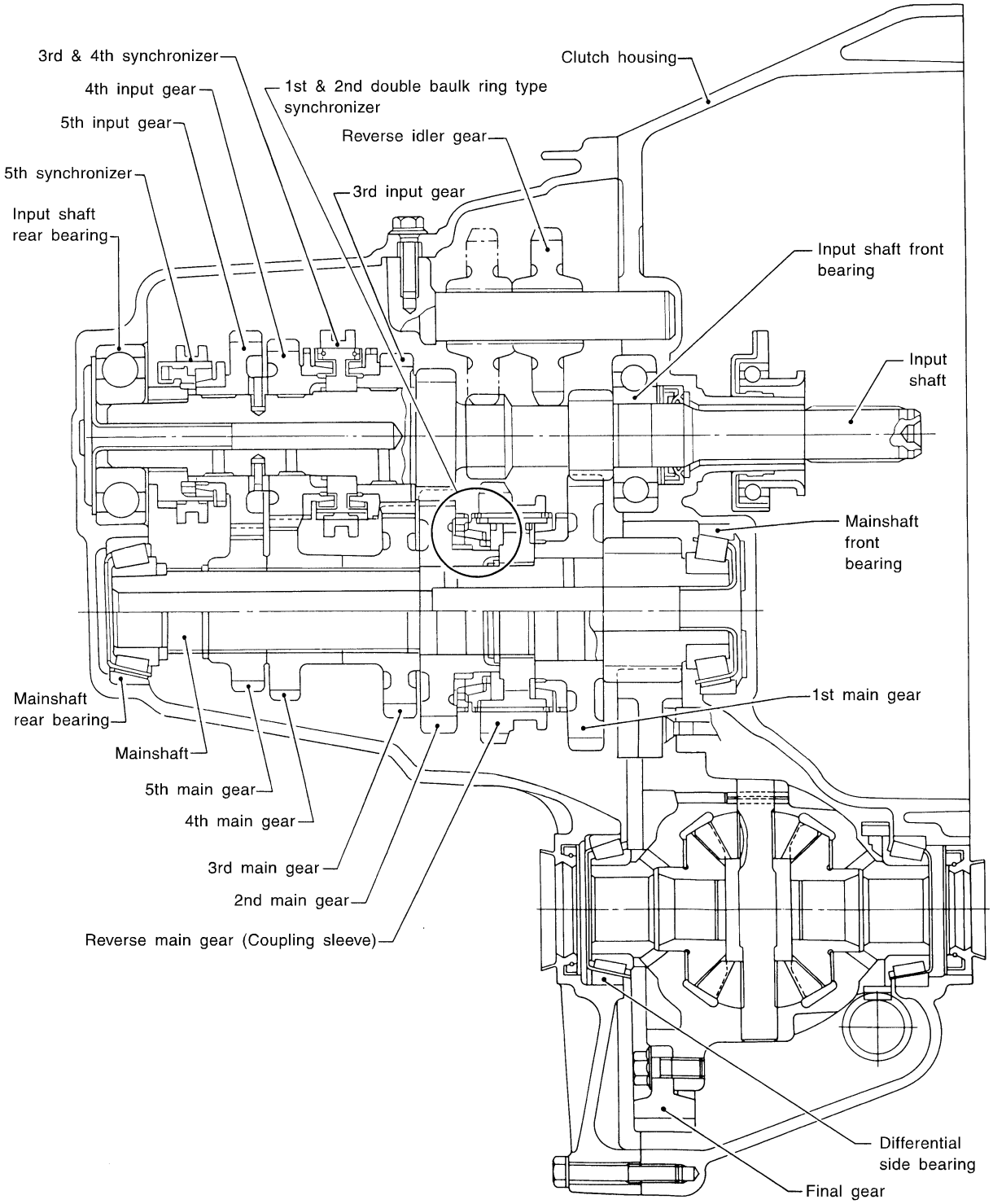

SMT196DA

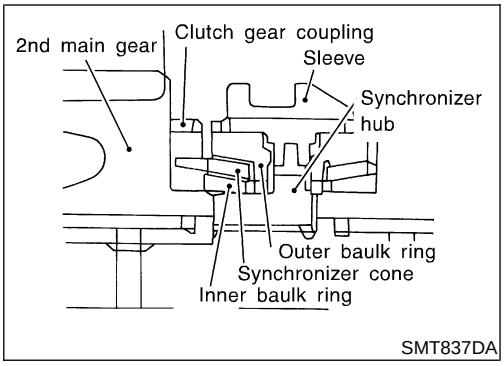

DOUBLE-CONE SYNCHRONIZER

NLMT0034S0403

— RS5F70A and RS5F50A —

Double-cone synchronizer is adopted for 1st and 2nd gears to reduce operating force of the shift lever.

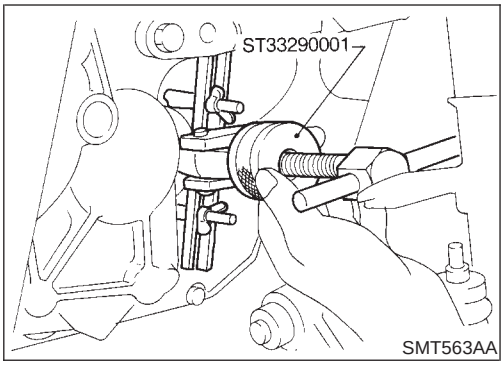

Replacing Oil Seal

NLMT0035

DIFFERENTIAL OIL SEAL

NLMT0035S01

1. Drain gear oil from transaxle.
2. Remove drive shafts. Refer to AX-11, “Removal”.
3. Remove differential oil seal.

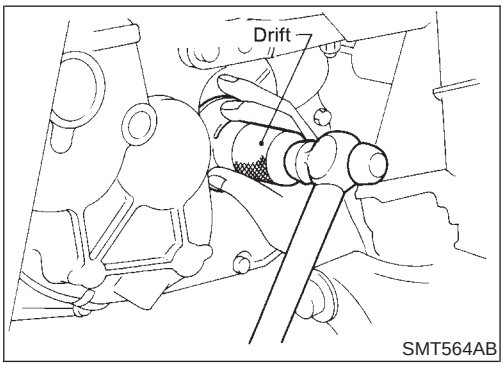

4. Install differential oil seal.
- **Apply multi-purpose grease to seal lip of oil seal before installing.**
5. Install drive shafts. Refer to AX-11, “Installation”.

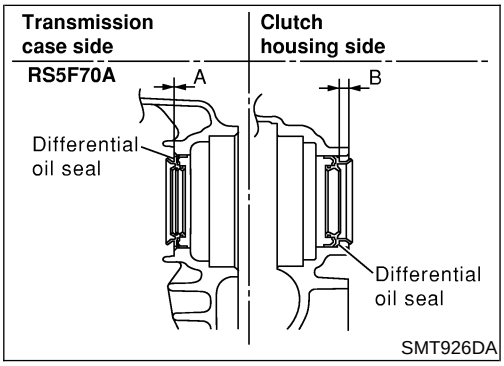

- **Install differential oil seal so that dimension “A” and “B” are within specifications.**

Unit: mm (in)

Item	Model	A	B
Dimension	RS5F70A	−0.5 (−0.020) to 0.5 (0.020)	
	RS5F50A		

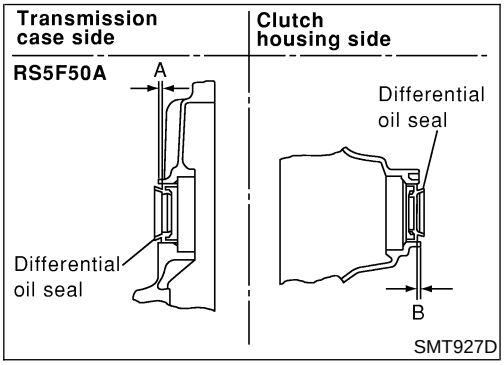

STRIKING ROD OIL SEAL

NLMT0035S02

1. Remove transaxle control rod from yoke.
2. Remove retaining pin of yoke.
- **Be careful not to damage boot.**

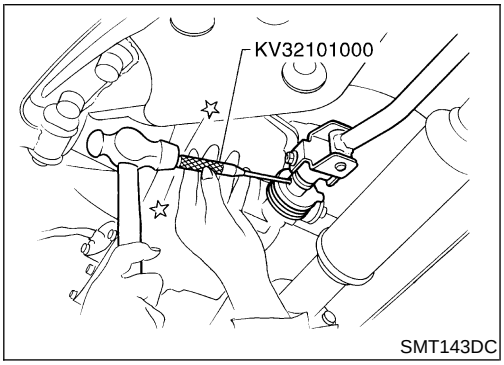

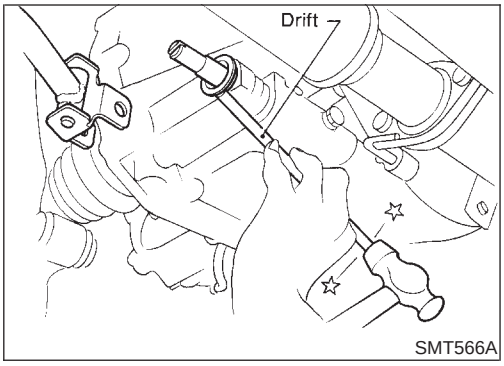

SMT566A

3. Remove striking rod oil seal.

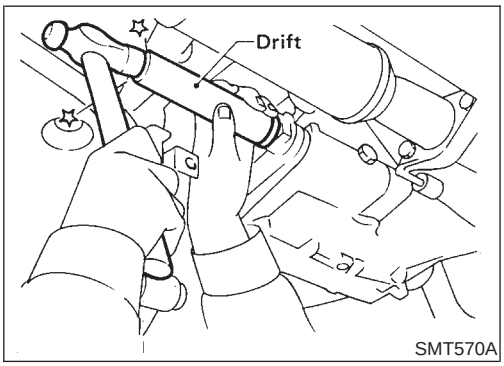

SMT570A

4. Install striking rod oil seal.
- **Apply multi-purpose grease to seal lip of oil seal before installing.**

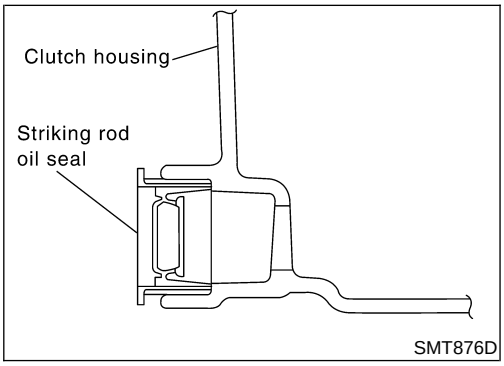

SMT876D

- **Drive it in as far as it will go.**

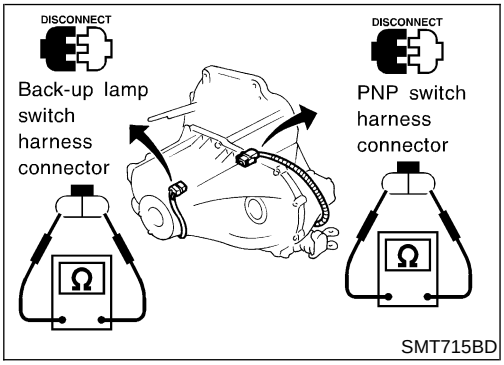

SMT715BD

Position Switch Check

NLMT0036

BACK-UP LAMP SWITCH

NLMT0036S01

— RS5F70A —

NLMT0036S0101

- Check continuity.

Gear position	Continuity
Reverse	Yes
Except reverse	No

PNP SWITCH

NLMT0036S02

— RS5F70A —

NLMT0036S0201

- Check continuity.

Gear position	Continuity
Neutral	Yes
Except neutral	No

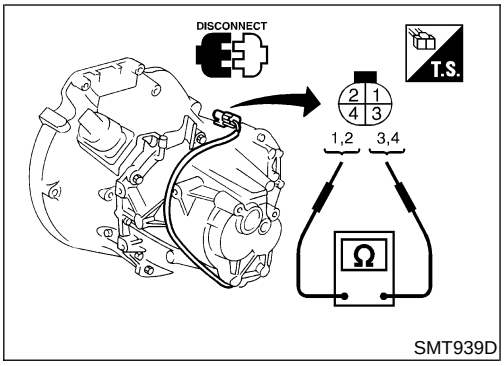

SMT939D

BACK-UP LAMP SWITCH AND PNP SWITCH — RS5F50A —

NLMT0036S03

NLMT0036S0301

- Check continuity.

Gear position	Continuity
Reverse	1 - 3
Neutral	2 - 4
Except reverse and neutral	No

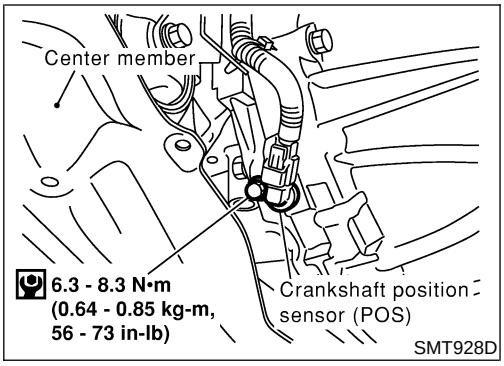

Removal

NLMT0008S01

CAUTION:
Remove the crankshaft position sensor (POS) from transaxle assembly before separating transaxle from engine.
Be careful not to damage sensor edge.

1. Remove battery and its bracket.
2. Remove air cleaner box with mass air flow sensor.

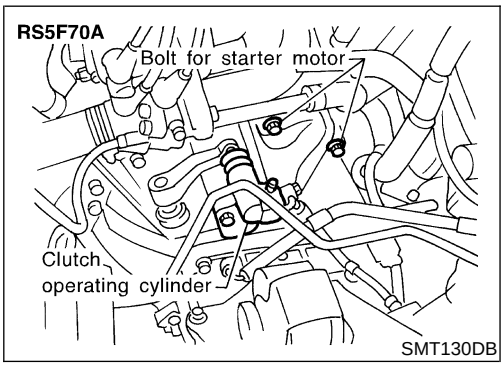

3. Remove clutch operating cylinder from transaxle.
4. Remove clutch hose clamp.
5. Disconnect speedometer pinion, back-up lamp, PNP switch (F70A) harness connectors and ground harness.
6. Remove starter motor from transaxle.
7. Remove crankshaft position sensor (POS) from transaxle front side.
8. Remove shift control rod and support rod bracket from transaxle.
9. Drain gear oil from transaxle.
10. Draw out drive shafts from transaxle. Refer to AX-11, “Removal”.
11. Support engine of transaxle by placing a jack under oil pan.

CAUTION:
Do not place jack under oil pan drain plug.

12. Remove bolts securing center member.

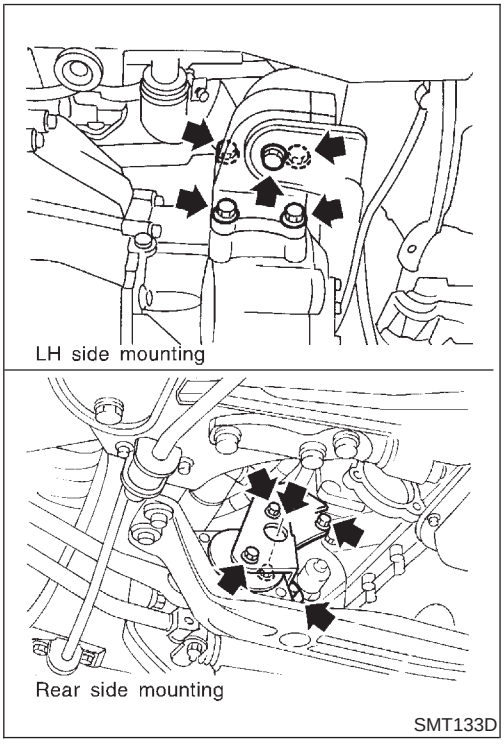

13. Remove LH mount and rear side mounting bolts. Refer to EM-70, “Removal and Installation”.
14. Remove bolts securing gusset and transaxle.

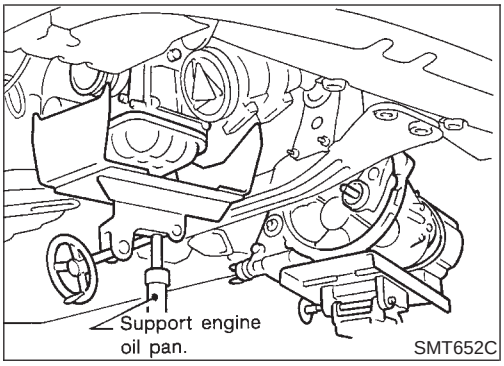

15. Lower transaxle while supporting it with a jack.

Installation

NLMT0008S02

- Tighten LH mount, rear side mount and center member bolts. Refer to EM-70, "Removal and Installation".
- Tighten clutch operating cylinder bolts. Refer to CL-15, "Installation".
- Tighten starter motor bolts. Refer to SC-19, "Removal and Installation".
- Install drive shafts. Refer to AX-11, "Installation".
- Tighten all transaxle bolts and any part removed.

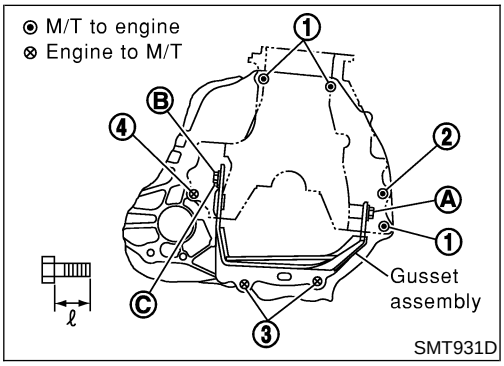

MODEL QG18DE ENGINE

NLMT0008S0202

Bolt No.	Tightening torque N·m (kg-m, ft-lb)	"ℓ" mm (in)
1	31 - 40 (3.1 - 4.1, 23 - 29)	70 (2.76)
2	31 - 40 (3.1 - 4.1, 23 - 29)	80 (3.15)
3	16 - 21 (1.6 - 2.2, 12 - 15)	25 (0.98)
4	31 - 40 (3.1 - 4.1, 23 - 29)	30 (1.18)
A	31 - 40 (3.1 - 4.1, 23 - 29)	20 (0.79)
B	31 - 40 (3.1 - 4.1, 23 - 29)	20 (0.79)
C	15 - 20 (1.5 - 2.1, 11 - 15)	17.5 (0.69)

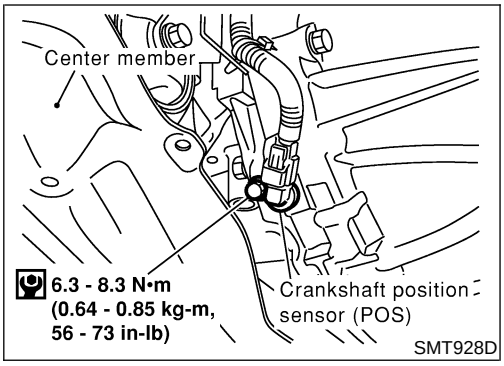

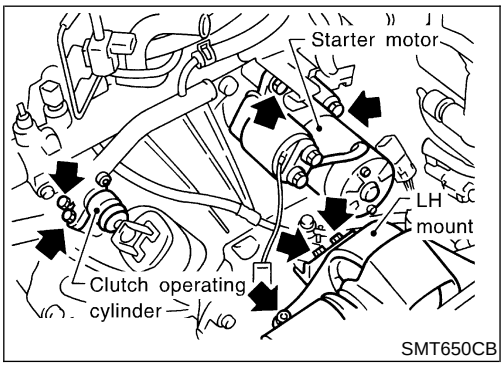

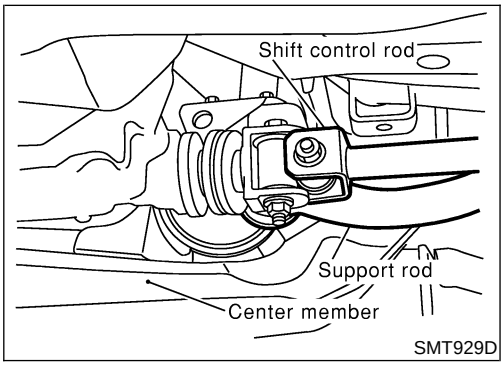

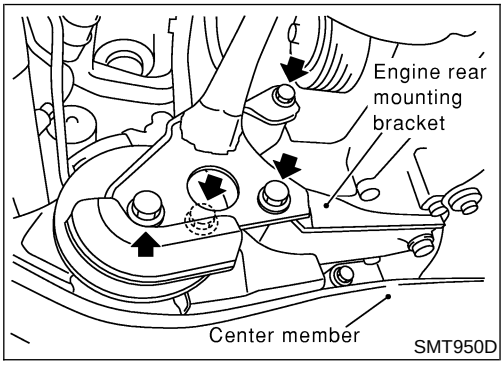

Removal

NLMT0090S01

CAUTION:

Remove the crankshaft position sensor (POS) from transaxle assembly before separating transaxle from engine.
Be careful not to damage sensor edge.

1. Remove battery and its bracket.
2. Remove fuse box from battery bracket.
3. Remove air cleaner box with mass air flow sensor.
4. Remove air breather hose and vacuum pump hose.
5. Remove fuel filter bracket bolts.
6. Remove terminal and connector from starter motor.
7. Remove starter motor from transaxle.
8. Remove clutch hose clamp.
9. Remove clutch operating cylinder from transaxle.
10. Disconnect speedometer pinion, PNP switch harness connectors and ground harness.
11. Remove crankshaft position sensor (POS) from transaxle front side.
12. Remove front exhaust tube.
13. Remove shift control rod and support rod bracket from transaxle.
14. Drain gear oil from transaxle.
15. Draw out drive shafts from transaxle. Refer to AX-11, “Removal”.
16. Support engine and transaxle by placing a jack under the transaxle.
17. Remove bolts securing center member.
18. Take out engine mounting bracket and transaxle installation bolts. Refer to EM-197, “Removal and Installation”.
19. Remove bolts securing transaxle under side.
20. Temporarily tighten center member.
21. Lower the lift.

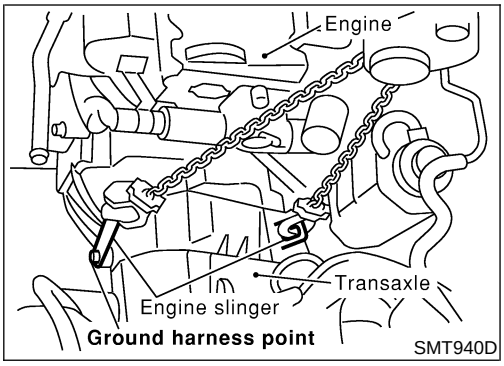

22. Pick up EGI harness clamp and install engine slinger. Next, set chain block.
23. Jack up the air compressor engine bracket.
24. Remove engine front mounting.
25. Remove LH side mounting. Refer to EM-197, "Removal and Installation".

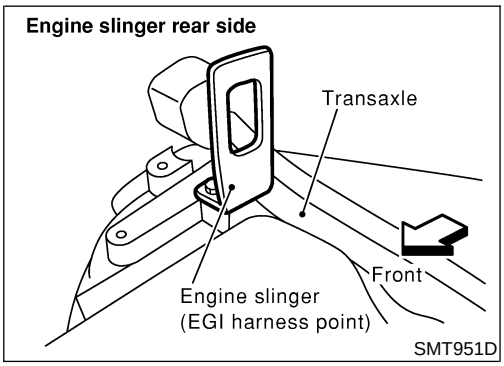

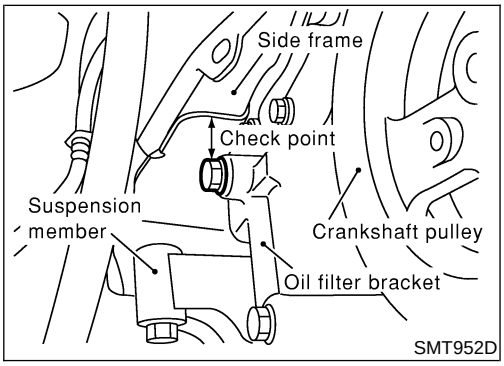

26. Jack up until engine oil filter bracket bolts are just about to touch the side frame.

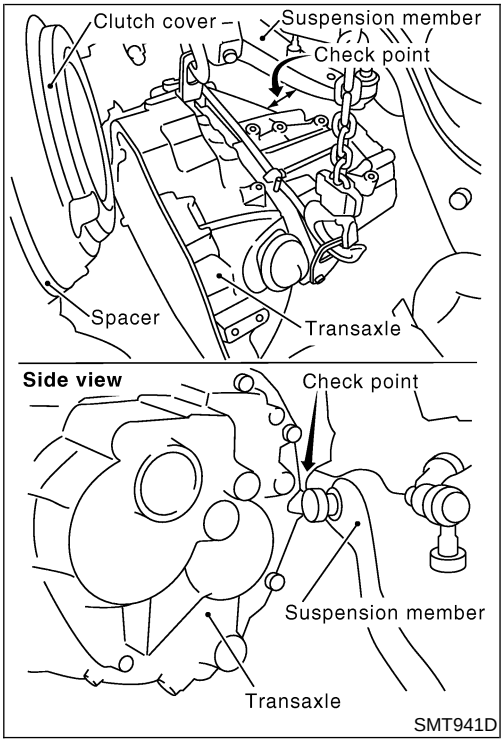

27. Remove bolts securing transaxle.
28. While the transaxle is suspended, withdraw the transaxle case from the engine without hitting suspension member.

- **Open the front of the transaxle when the clutch cover appears. Then, lower the transaxle pulling it toward the right front.**
- **The spacer between the engine and transaxle should be left at the engine side.**

29. Remove spacer.

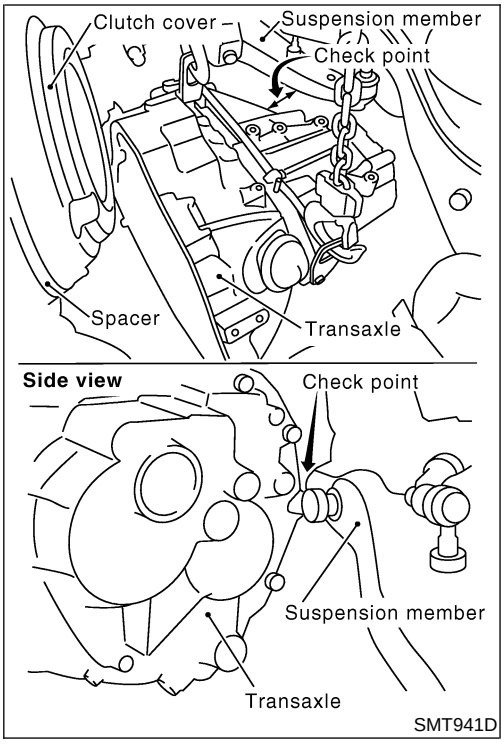

Installation

NLMT0090S02

1. Put transaxle under the engine compartment.
2. Set chain block on transaxle and hang.
3. Lift up transaxle case so as not to hit against the side frame and suspension member.
4. Assemble transaxle to engine.

- Tighten LH mount, rear side mount and center member bolts. Refer to EM-197, “Removal and Installation”.
- Tighten clutch operating cylinder bolts. Refer to CL-15, “Installation”.
- Tighten starter motor bolts. Refer to SC-19, “Removal and Installation”.
- Install drive shafts. Refer to AX-11, “Installation”.
- Tighten all transaxle bolts and any part removed.

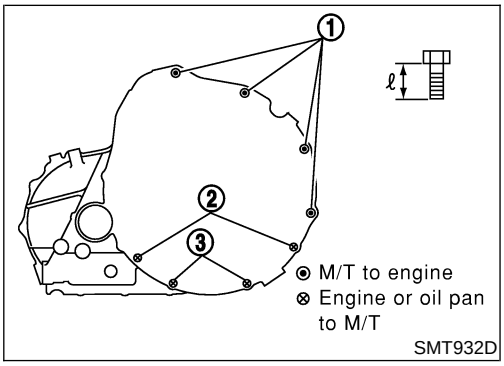

MODEL YD ENGINE

NLMT0090S0201

Bolt No.	Tightening torque N·m (kg-m, ft-lb)	“ℓ” mm (in)
1	40 - 49 (4.0 - 5.0, 29 - 36)	70 (2.76)
2	30.4 - 36.3 (3.1 - 3.7, 23 - 26)	60 (2.36)
3	30.4 - 36.3 (3.1 - 3.7, 23 - 26)	55 (2.17)

Components

NLMT0038S01

SEC. 341

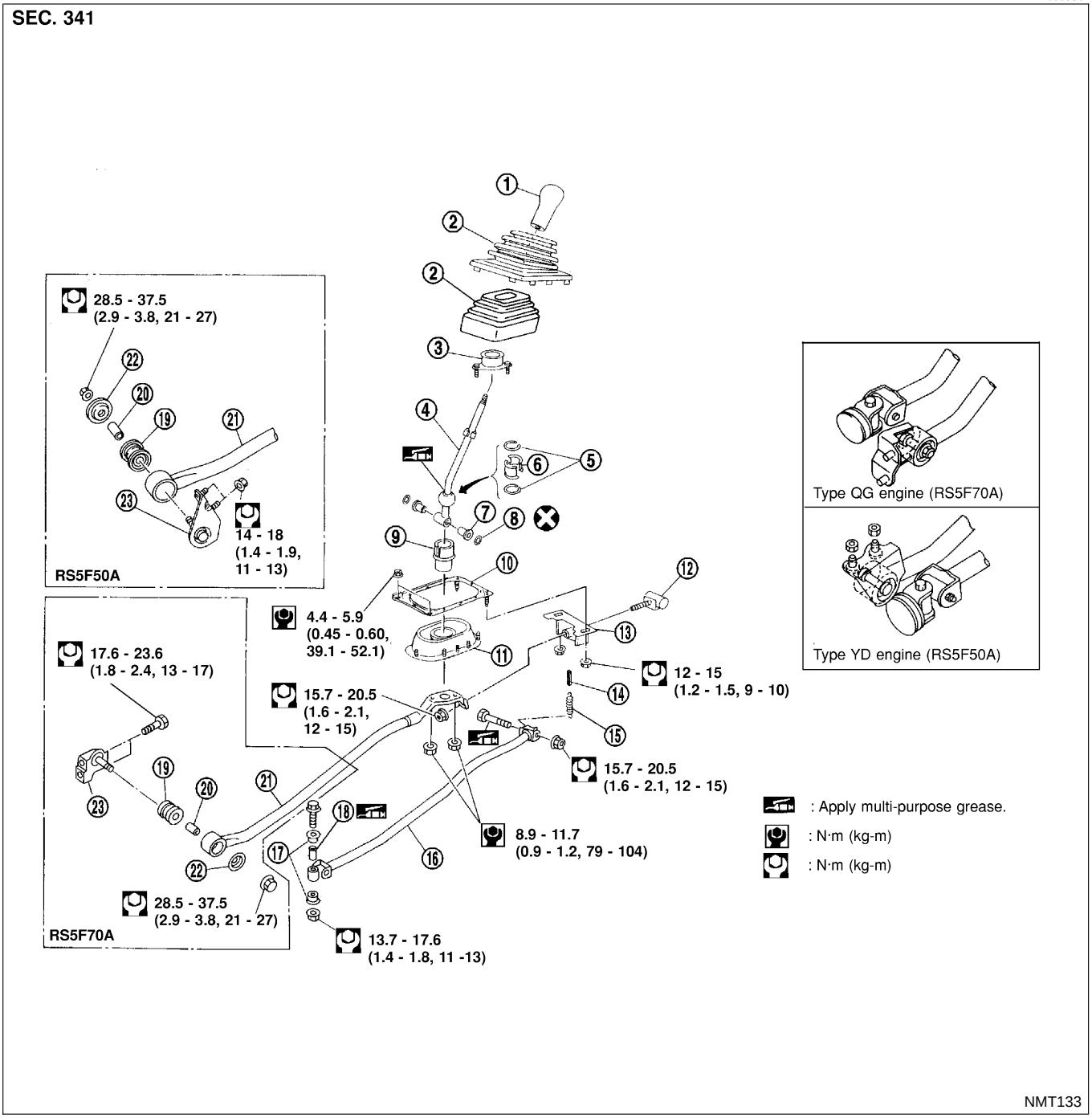

1. Control lever knob
2. Boot
3. Control lever socket
4. Control lever
5. Bearing seat spring
6. Seat
7. Bushing
8. O-ring
9. Hand lever socket
10. Plate bolt
11. Transaxle hole cover
12. Mass damper
13. Holder bracket
14. Return spring rubber
15. Return spring
16. Control rod
17. Bushing
18. Collar
19. Bushing
20. Collar
21. Support rod
22. Plate
23. Support rod bracket

Case Components

NLMT0054S02

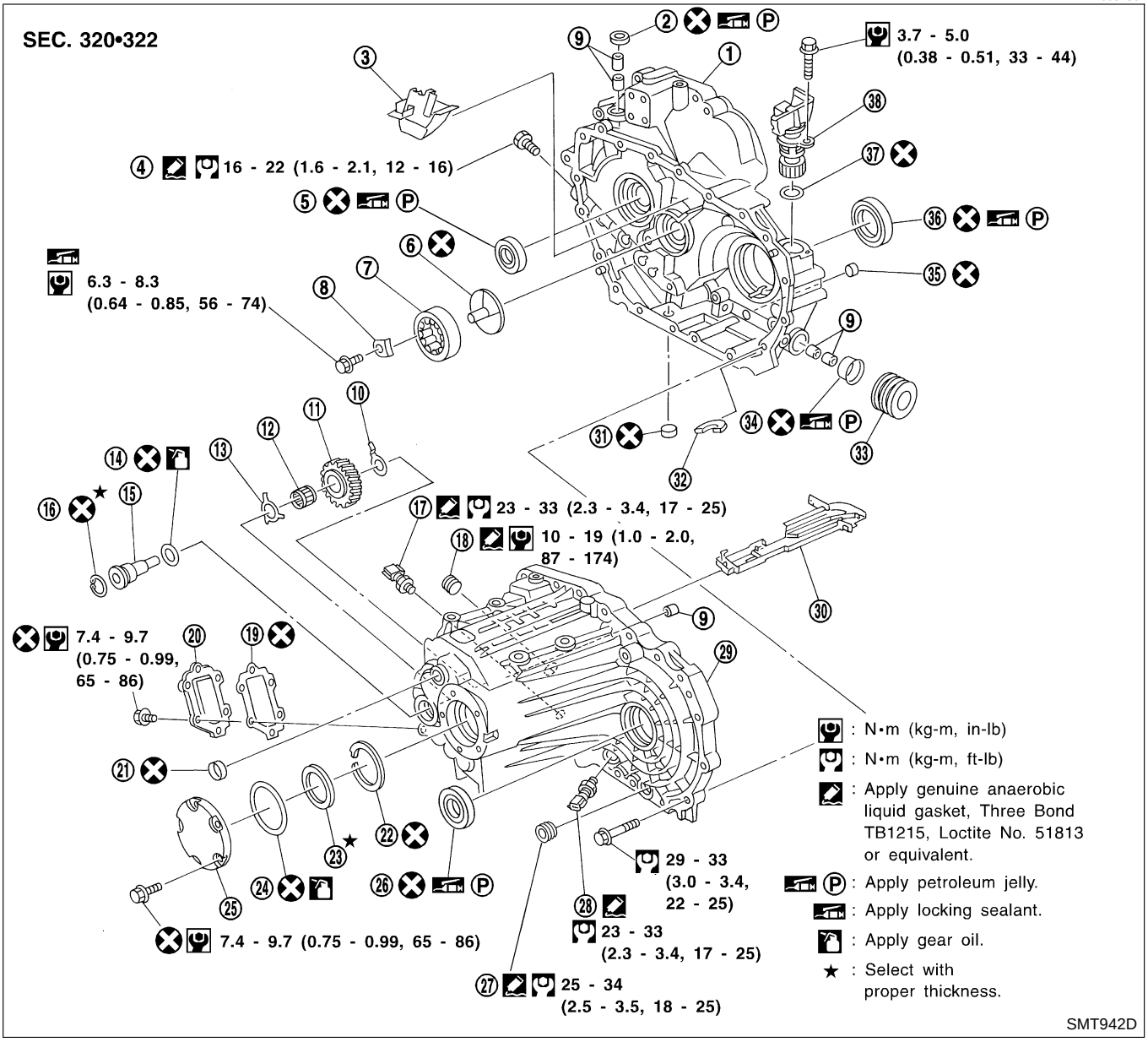

1. Clutch housing
2. Dust seal
3. Oil pocket
4. Check plug
5. Input shaft oil seal
6. Oil channel
7. Mainshaft front bearing
8. Bearing retainer
9. Bushing
10. Reverse idler gear front thrust washer
11. Reverse idler gear
12. Reverse idler gear bearing
13. Reverse idler gear rear thrust washer
14. O-ring
15. Reverse idler gear shaft
16. Snap ring
17. Reverse switch
18. Filler plug
19. Side cover gasket
20. Side cover
21. Welch plug
22. Mainshaft bearing snap ring
23. Mainshaft rear bearing adjusting shim
24. O-ring
25. Rear cover
26. Differential oil seal
27. Drain plug
28. PNP switch
29. Transmission case
30. Oil gutter
31. Welch plug
32. Magnet
33. Boot
34. Striking rod oil seal
35. Welch plug
36. Differential oil seal
37. O-ring
38. Speedometer pinion

Gear Components

=NLMT0054S03

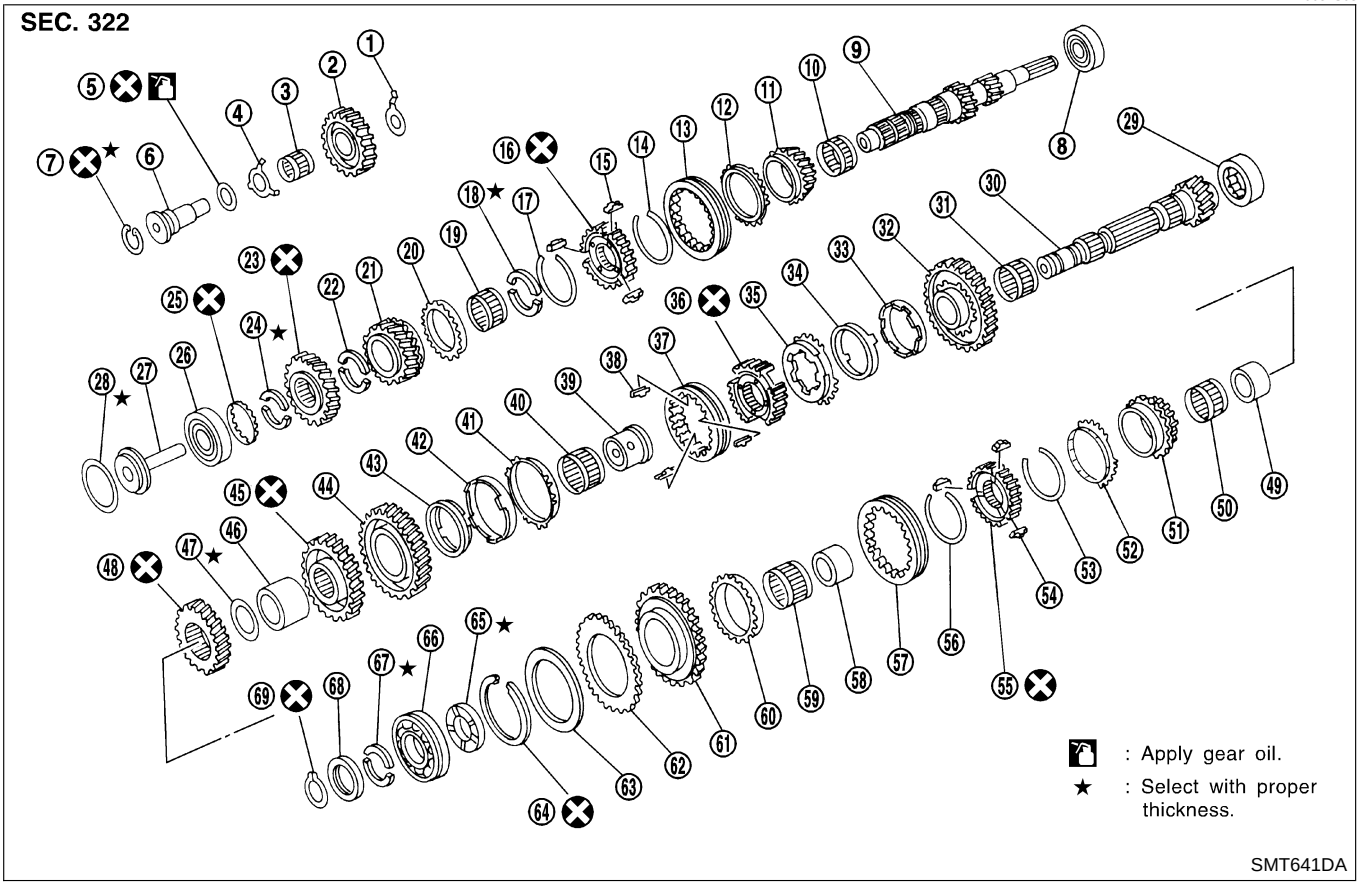

1. Reverse idler gear front thrust washer
2. Reverse idler gear
3. Reverse idler gear bearing
4. Reverse idle gear rear thrust washer
5. O-ring
6. Reverse idler gear shaft
7. Snap ring
8. Input shaft front bearing
9. Input shaft
10. 3rd gear needle bearing
11. 3rd input gear
12. 3rd gear baulk ring
13. Coupling sleeve
14. Spread spring
15. Shifting insert
16. 3rd & 4th synchronizer hub
17. Spread spring
18. 4th gear C-ring
19. 4th gear needle bearing
20. 4th gear baulk ring
21. 4th input gear
22. 5th gear front C-ring
23. 5th input gear
24. 5th gear rear C-ring
25. C-ring holder
26. Input shaft rear bearing
27. Oil channel
28. Input shaft rear bearing adjusting shim
29. Mainshaft front bearing
30. Mainshaft
31. 1st gear needle bearing
32. 1st main gear
33. 1st inner baulk ring
34. 1st synchronizer cone
35. 1st outer baulk ring
36. 1st & 2nd synchronizer hub
37. Coupling sleeve
38. Insert spring
39. 2nd gear bush
40. 2nd gear needle bearing
41. 2nd gear outer baulk ring
42. 2nd gear synchronizer cone
43. 2nd inner baulk ring
44. 2nd main gear
45. 3rd main gear
46. Spacer
47. Mainshaft adjusting shim
48. 4th main gear
49. 5th gear bush
50. 5th gear needle bearing
51. 5th main gear
52. 5th gear baulk ring
53. Spread spring
54. Shifting insert
55. 5th & reverse synchronizer hub
56. Spread spring
57. Coupling sleeve
58. Reverse gear bush
59. Reverse gear needle bearing
60. Reverse gear baulk ring
61. Reverse main gear
62. Sub-gear
63. Sub-gear washer
64. Snap ring
65. Mainshaft thrust washer
66. Mainshaft rear bearing
67. Mainshaft C-ring
68. C-ring holder
69. Snap ring

Shift Control Components

=NLMT0054S04

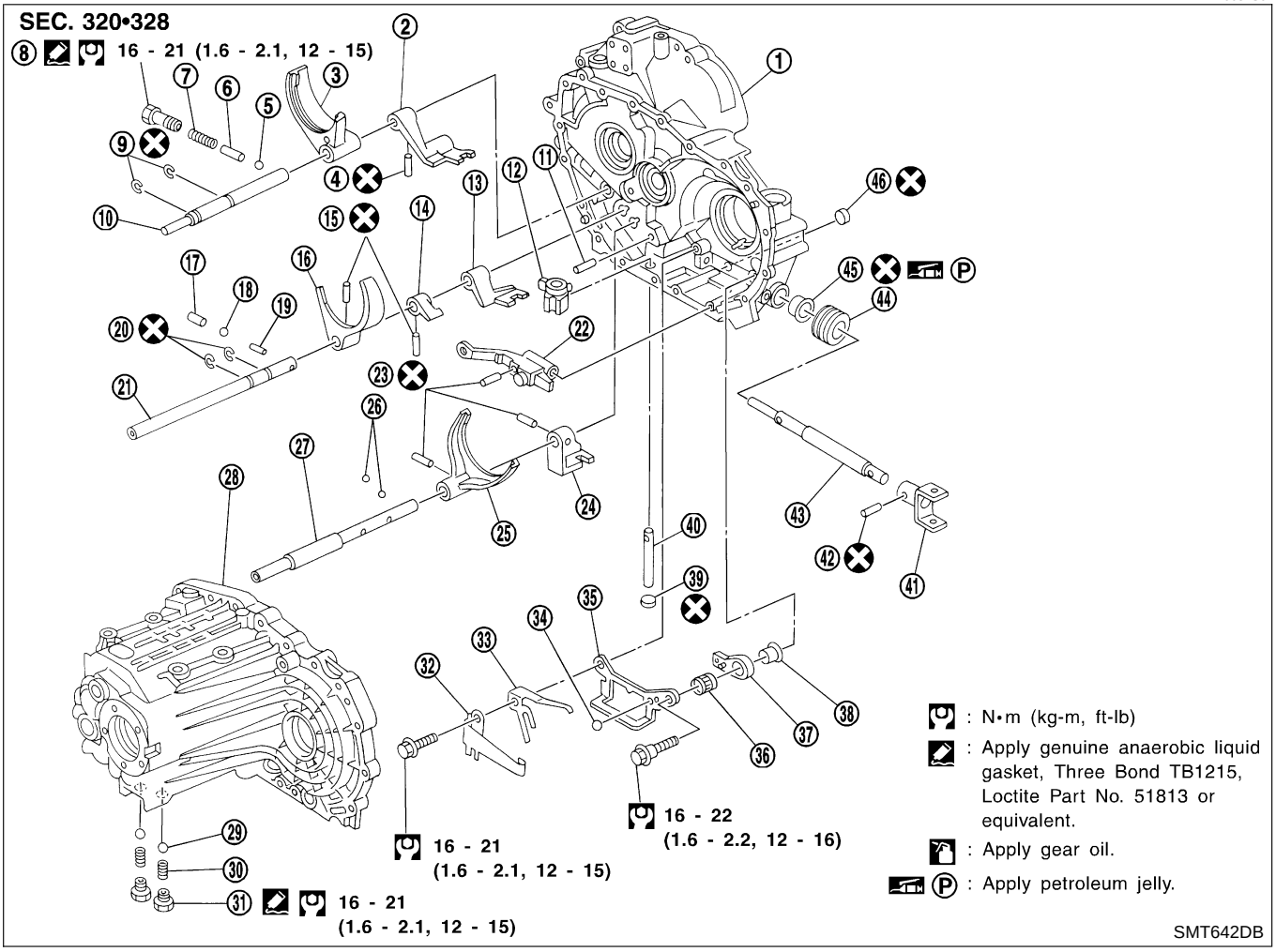

1. Clutch housing
2. 3rd & 4th bracket
3. 3rd & 4th shift fork
4. Retaining pin
5. Check ball
6. Check pin
7. Check spring
8. Check plug
9. Stopper ring
10. 3rd & 4th fork rod
11. Selector shaft pin
12. Selector
13. 5th & reverse bracket
14. Reverse switch bracket
15. Retaining pin
16. 5th & reverse shift fork
17. Interlock plunger
18. Check ball
19. Interlock pin
20. Stopper ring
21. 5th & reverse fork rod
22. Striking lever
23. Retaining pin
24. 1st & 2nd bracket
25. 1st & 2nd shift fork
26. Check ball
27. 1st & 2nd fork rod
28. Transaxle case
29. Check ball
30. Check spring
31. Check plug
32. Select check leaf spring
33. Return spring
34. Steel ball
35. Reverse gate
36. Return bearing
37. Selector arm
38. Bushing
39. Welch plug
40. Selector shaft
41. Striking yoke
42. Retaining pin
43. Striking rod
44. Dust boot
45. Striking rod oil seal
46. Welch plug

Final Drive Components

=NLMT0054S05

SEC. 322

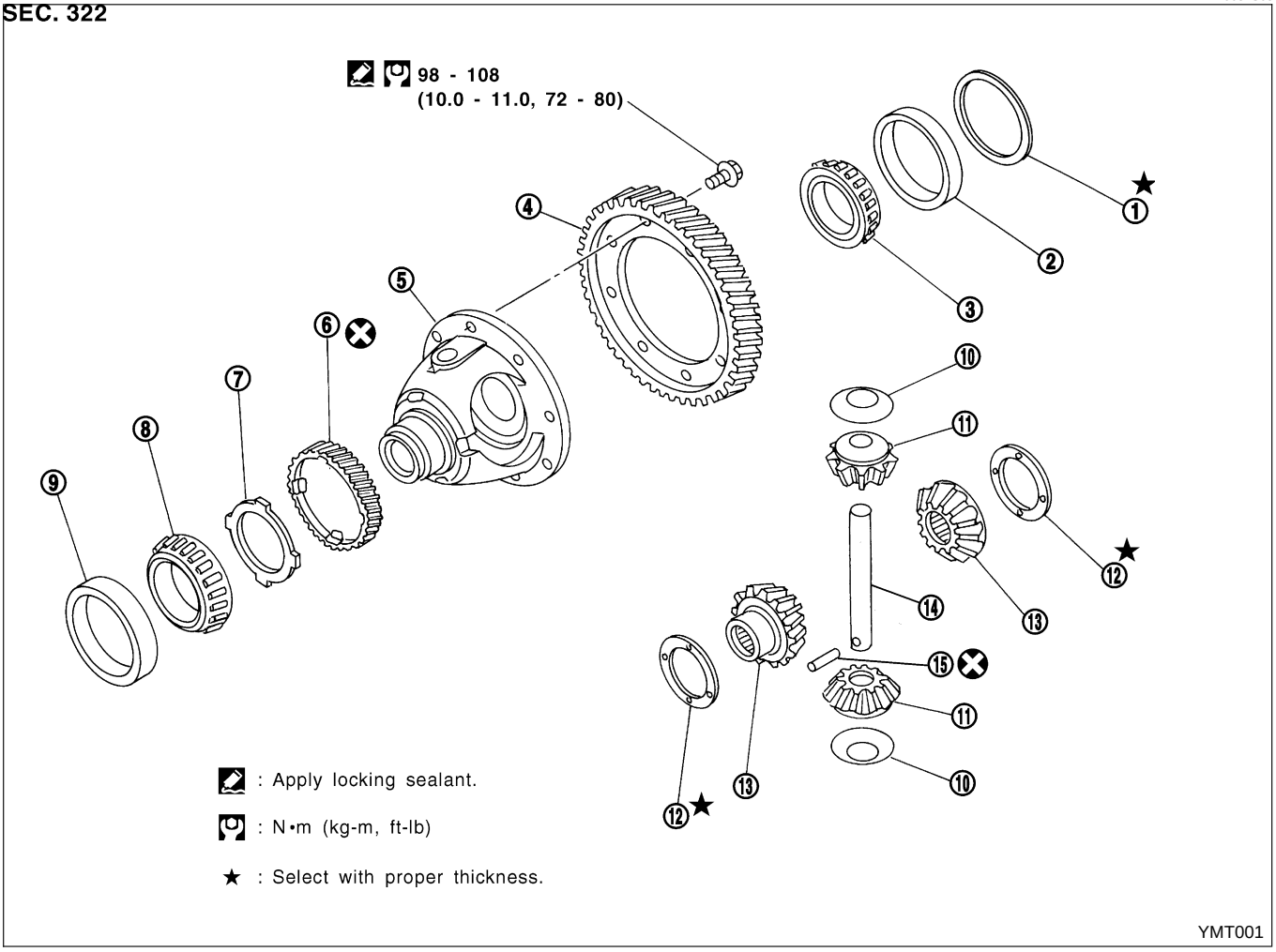

1. Differential side bearing adjusting shim
2. Differential side bearing outer race
3. Differential side bearing
4. Final gear
5. Differential case
6. Speedometer drive gear
7. Speedometer stopper
8. Differential side bearing
9. Differential side bearing outer race
10. Pinion mate thrust washer
11. Pinion mate gear
12. Side gear thrust washer
13. Side gear
14. Pinion mate shaft
15. Lock pin

Transaxle Case

NLMT0055S01

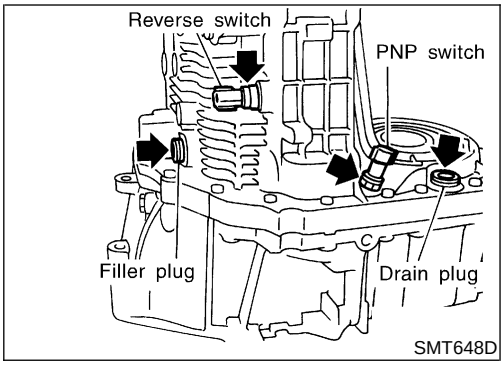

1. Remove reverse switch, PNP switch, drain plug, and filler plug from transaxle case.

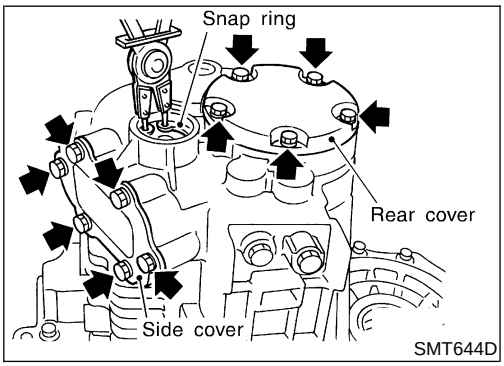

2. Remove snap rings from reverse idler shaft.
3. Remove side cover and rear cover from case.
4. Remove O-ring and mainshaft bearing adjusting shim.

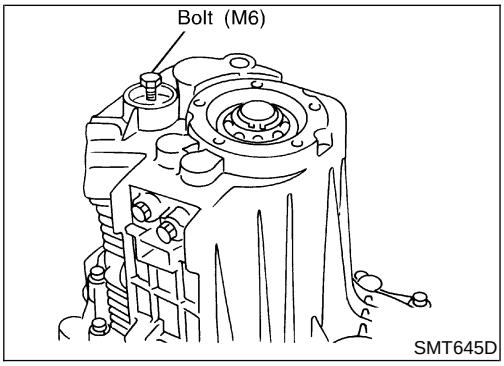

5. Remove reverse idler gear shaft.
a. Attach bolt (M6) to thread of reverse idler gear shaft end.
b. Pull out the attached bolt, and remove reverse idler gear shaft from case.
6. Remove reverse idler gear, thrust washer (front, rear), and bearing from case.

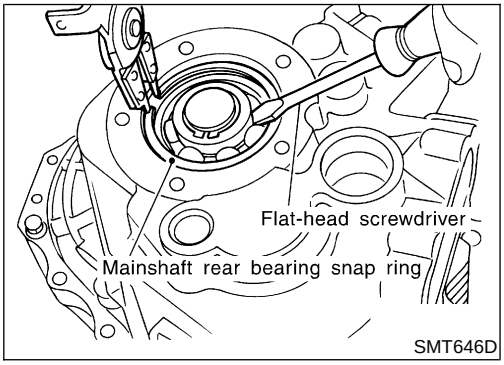

7. Remove snap ring of mainshaft bearing from case.

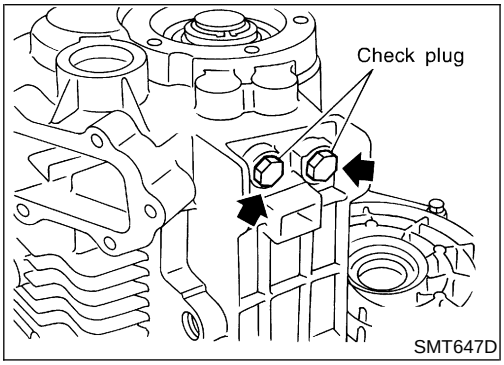

8. Remove check plugs, springs, and check balls from case.

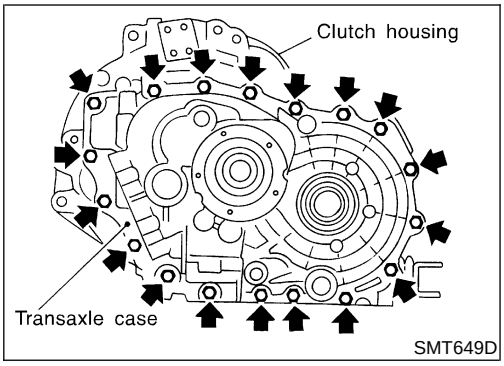

9. Remove mounting bolts.
10. Remove input shaft rear bearing adjusting shim from transaxle case.

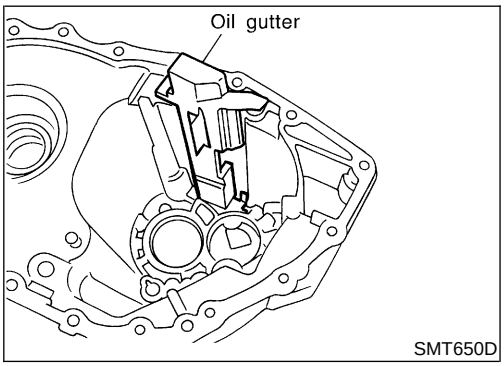

11. Remove oil gutter from case.

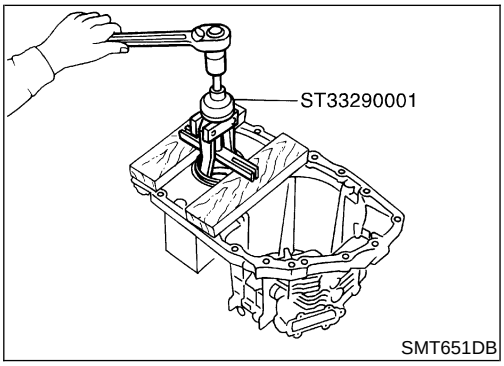

12. Remove differential side bearing outer race and adjusting shim from case.

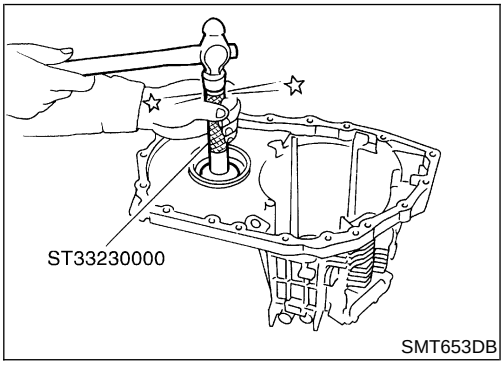

13. Remove differential oil seal from case.

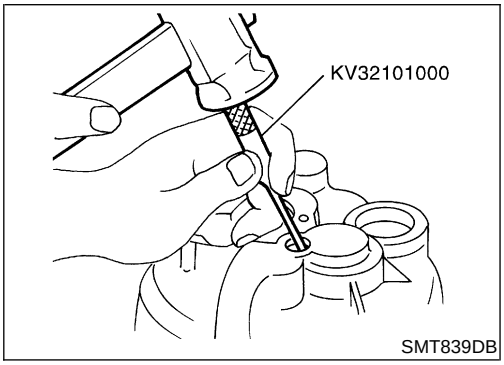

14. Remove welch plugs from case.

Clutch Housing

NLMT0055S02

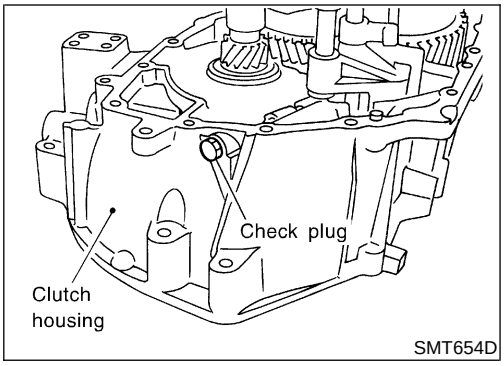

SMT654D

1. Remove transaxle case from clutch housing.
2. Remove magnet from housing.
3. Remove check plugs, check springs, check pins, and check balls from housing.

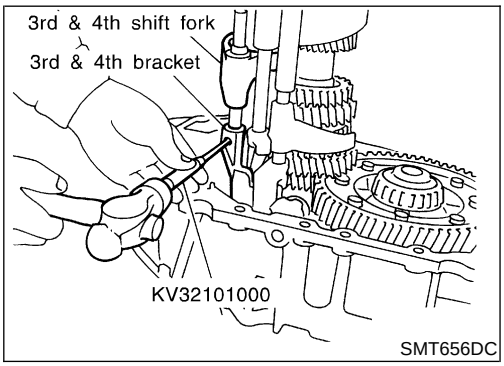

SMT656DC

4. Remove 3rd & 4th bracket retaining pin.

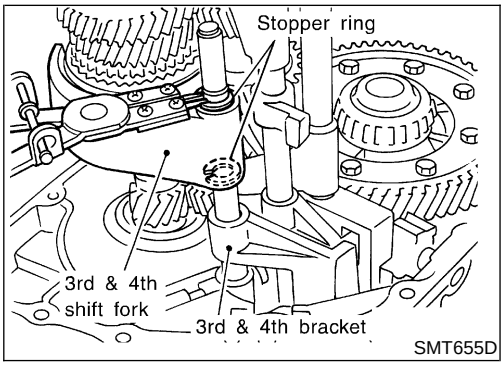

SMT655D

5. Remove 3rd & 4th shift fork stopper ring.
6. Remove 3rd & 4th fork rod.
7. Remove 3rd & 4th shift fork and bracket.

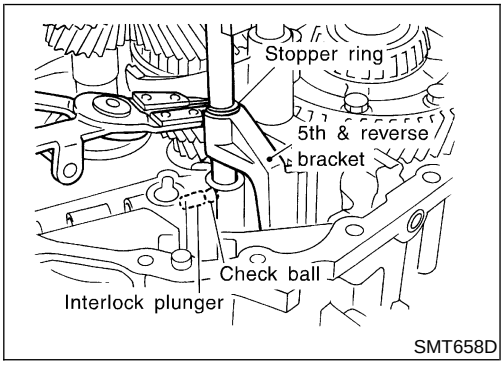

SMT658D

8. Remove interlock plunger and check ball.
9. Remove 5th & reverse bracket stopper ring.

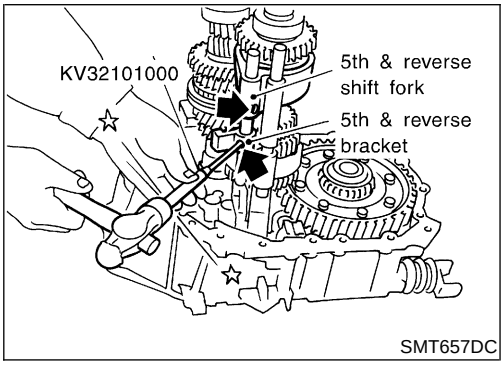

SMT657DC

10. Remove retaining pin from 5th & reverse shift fork and reverse switch bracket.
11. Remove 5th & reverse fork rod.
12. Remove interlock pin from 5th & reverse fork rod.
13. Remove reverse switch bracket and 5th & reverse bracket.

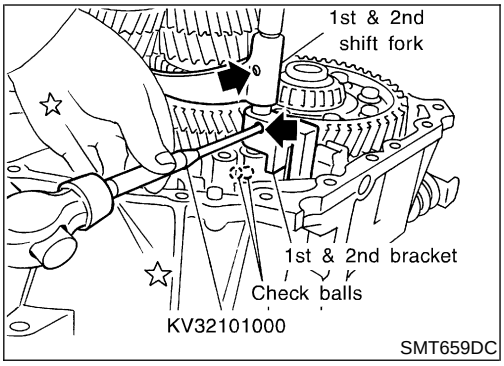

14. Remove check ball from housing.
15. Remove retaining pin for 1st & 2nd shift fork and bracket.
16. Remove 1st & 2nd fork rod.
17. Remove 5th & reverse and 1st & 2nd shift forks, and 1st & 2nd bracket.

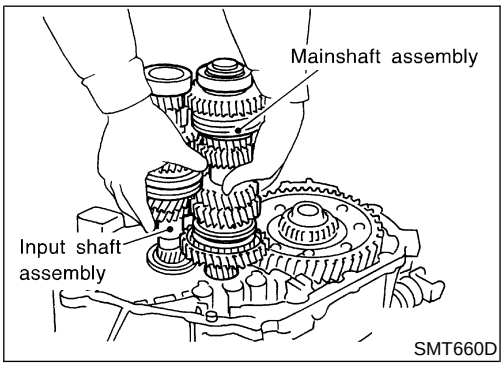

18. Remove both input shaft and mainshaft assemblies from housing.

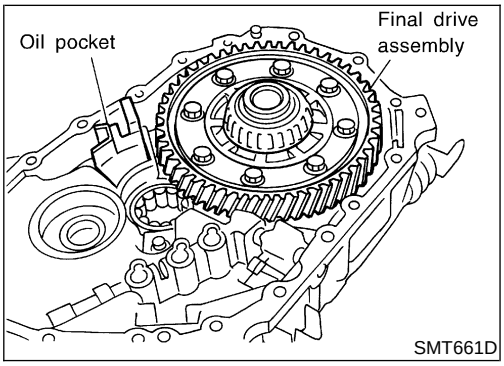

19. Remove final drive assembly from housing.
20. Remove oil pocket from housing.

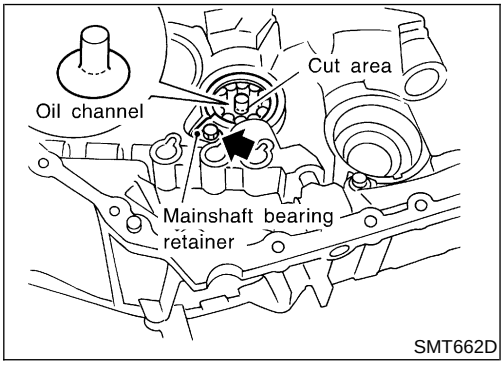

21. Remove mainshaft bearing retainer from housing.
22. Cut off oil channel using a cutter as shown in the figure.

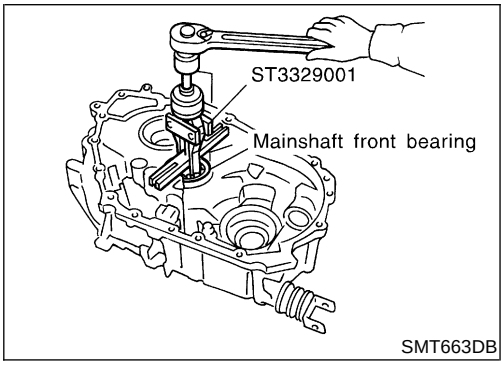

23. Remove mainshaft front bearing from housing.

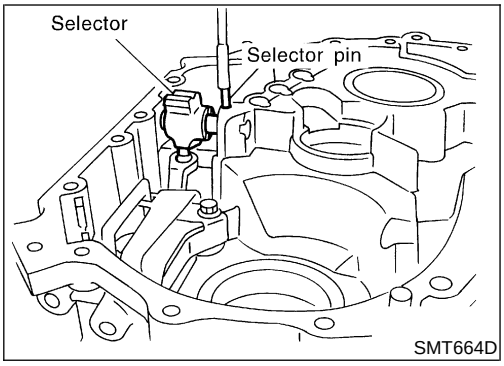

24. Using a magnet or other suitable tool, remove retaining pin from selector shaft.

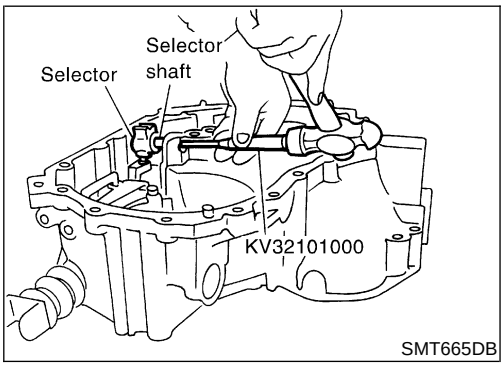

25. Remove selector shaft and plug, then remove selector.

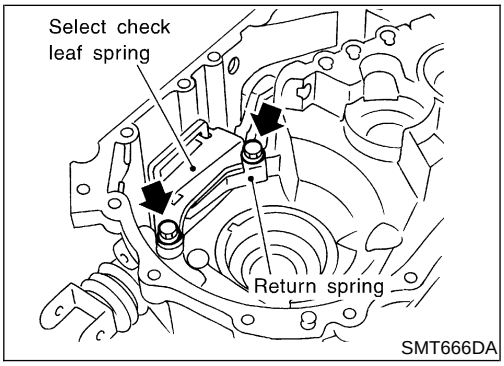

26. Remove reamer bolt, then remove select check leaf spring, return spring, steel ball, reverse gate, selector arm, bearing, and bushing.

CAUTION:
Be careful not to lose the steel ball.

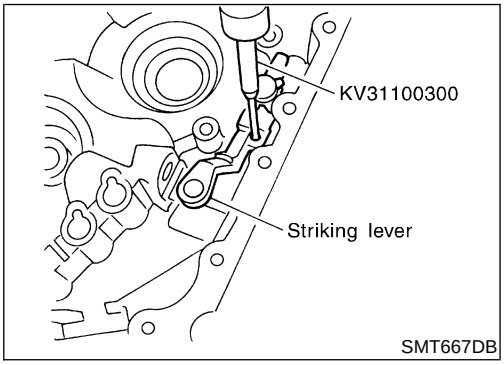

27. Remove retaining pin and plug from striking lever.
28. Remove striking rod, then striking lever from housing.

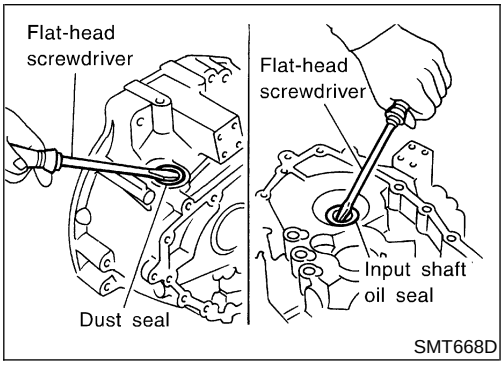

29. Using a flat-head screwdriver or other suitable tool, remove dust seal, input shaft oil seal, and striking rod oil seal from housing.

CAUTION:
When removing dust and oil seals, be careful not to damage mounting surfaces of dust seal and oil seal.

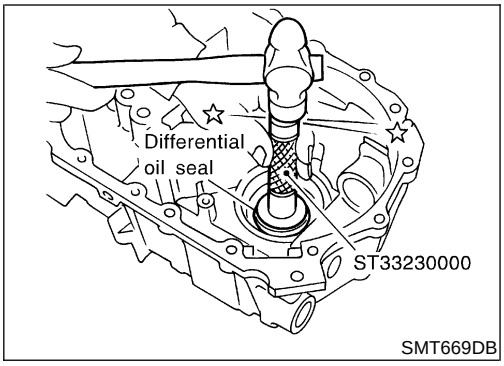

30. Remove differential oil seal from housing.

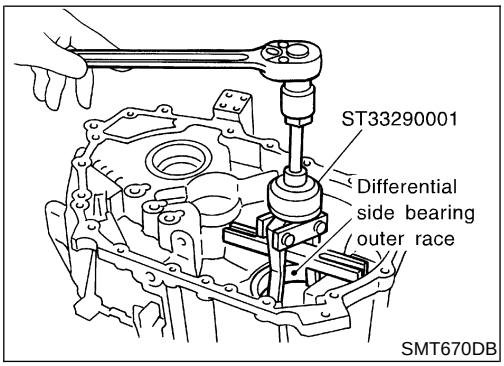

31. Remove differential side outer race from housing.

Input Shaft and Gears

DISASSEMBLY

NLMT0056

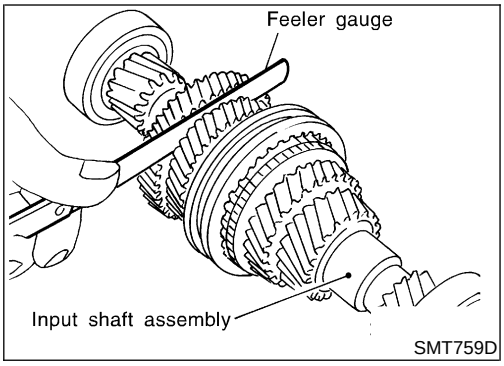

1. Before disassembly, measure the end plays of 3rd and 4th input gears.

   Gear end play:

   Refer to SDS, MT-90.

- If end play is not within specification, disassemble and check the parts.

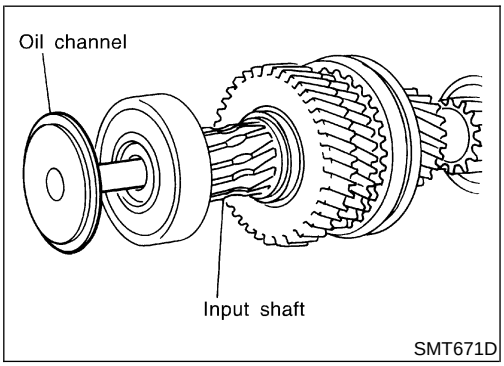

2. Remove oil channel from input shaft rear bearing.

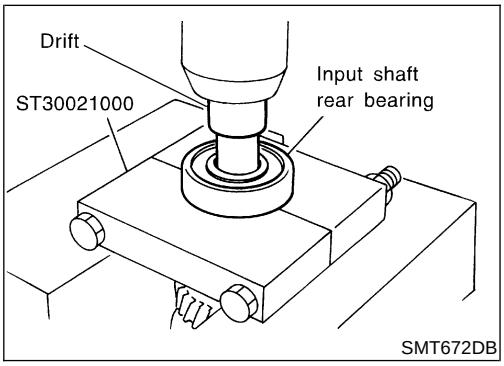

3. Press out input shaft rear bearing.

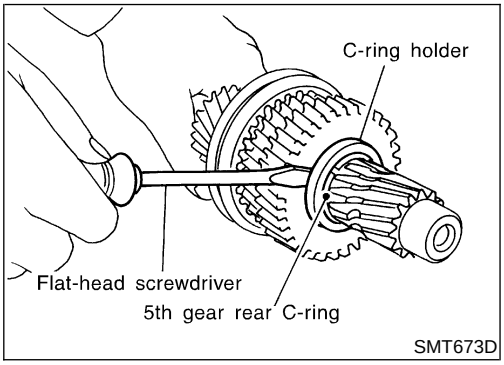

4. Remove C-ring holder.
5. Remove 5th gear rear C-ring.

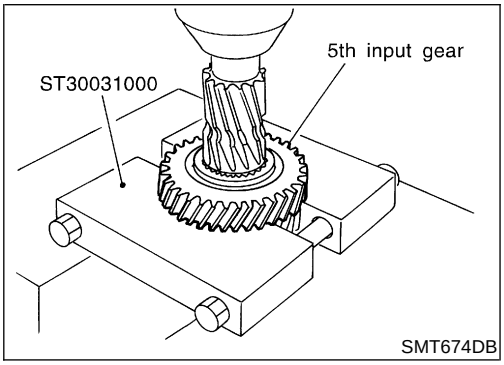

6. Remove 5th input gear from input shaft.
7. Remove 5th gear front C-ring.

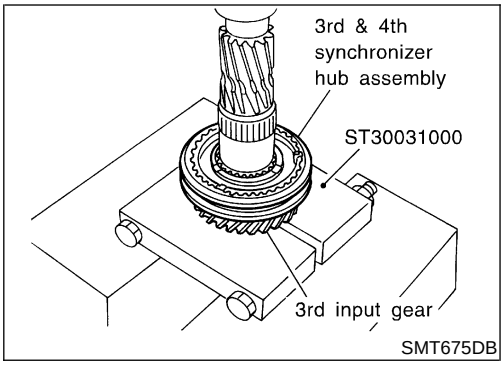

8. Remove 4th input gear, baulk ring, 4th gear needle bearing, and 4th gear C-ring from input shaft.
9. Press out both 3rd & 4th synchronizer hub assembly and 3rd input gear from input shaft.
10. Remove 3rd gear needle bearing.

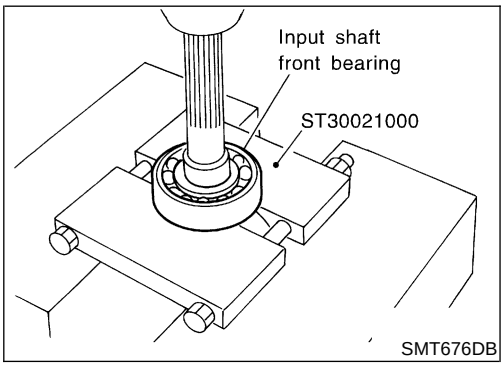

11. Press out input shaft front bearing from input shaft.

INSPECTION

NLMT0057

Input Shaft and Gears

NLMT0057S01

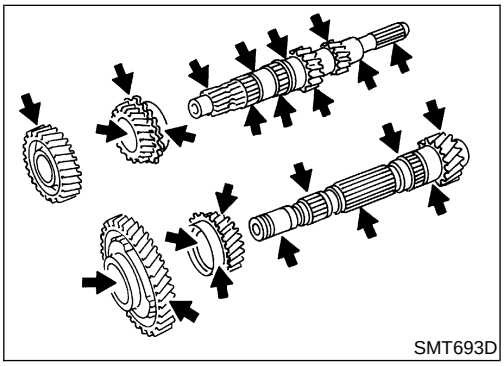

- Check shaft for cracks, wear or bending.
- Check gears for excessive wear, chips or cracks.

Synchronizers

NLMT0057S02

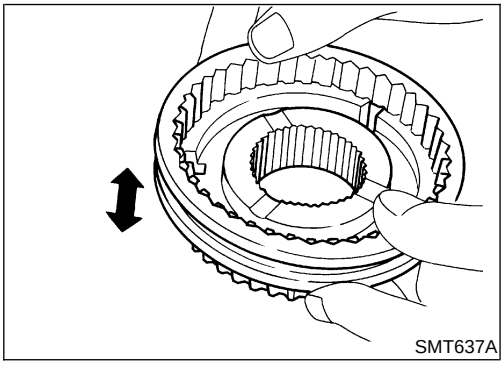

- Check spline area of coupling sleeves, hubs and gears for wear or cracks.
- Check baulk rings for cracks or deformation.
- Check insert springs for wear or deformation.

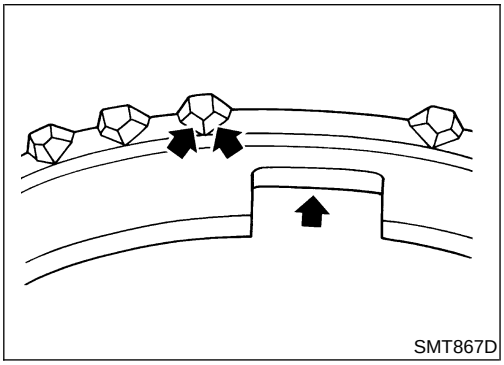

- If any crack, damage, or excessive wear is found on cam face of baulk ring or working face of insert, replace it.

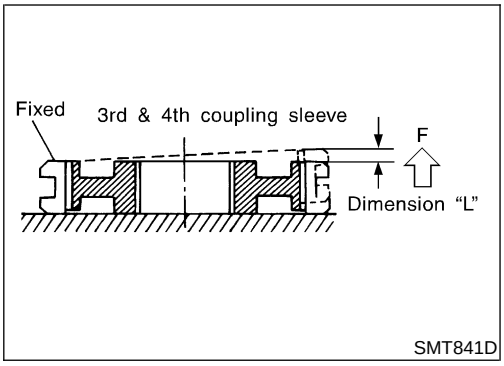

- Measure the movement (play, dimension "L") of 3rd & 4th coupling sleeve with their end fixed and the other end lifted as shown in the figure. If the movement exceeds specification, replace the sleeve.

  Coupling sleeve length "L":
  Refer to SDS, MT-90.

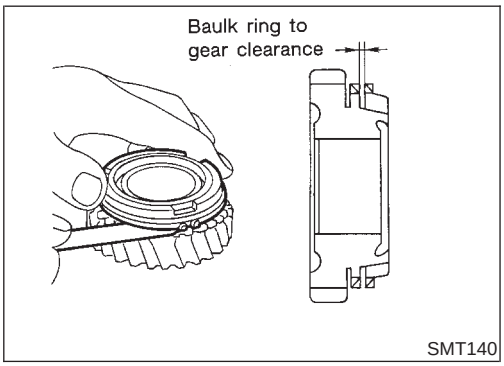

- Measure clearance between baulk ring and gear.

  Clearance between baulk ring and gear:
  Refer to SDS, MT-90.

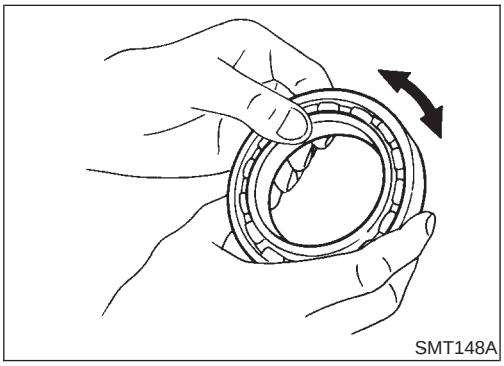

Bearing

NLMT0057S03

- Make sure bearings roll freely and are free from noise, cracks, pitting or wear.

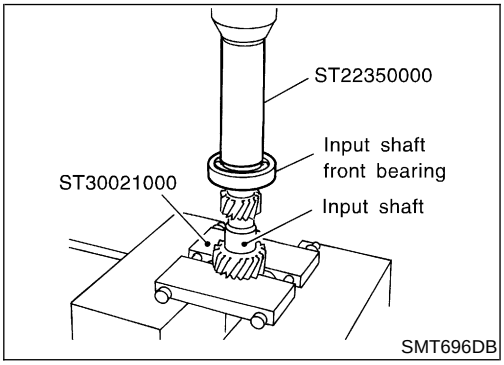

ASSEMBLY

NLMT0058

1. Press on input shaft front bearing.
2. Install 3rd gear needle, 3rd input gear and 3rd gear baulk ring bearing to input shaft.

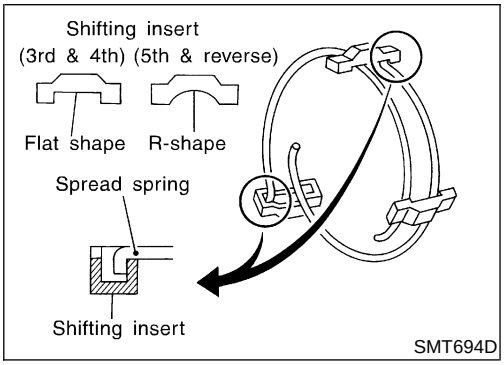

3. Install spread spring, shifting insert, and 3rd & 4th synchronizer hub onto 3rd & 4th coupling sleeve.

- Pay attention to the shape of spread spring and shifting insert for correct assembly.
  Do not install spread spring hook onto the same shifting insert.

CAUTION:
Do not reuse 3rd & 4th synchronizer hub.

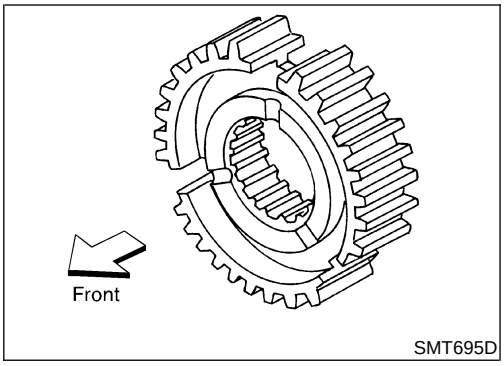

- Install synchronizer hub with its three grooves facing the front side (3rd input gear side).

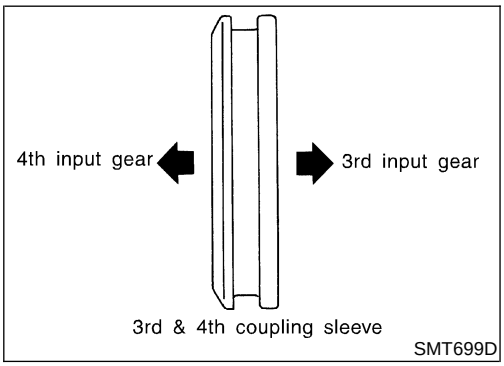

- Install 3rd & 4th coupling sleeve with its chamfered surface facing the 4th input gear side.

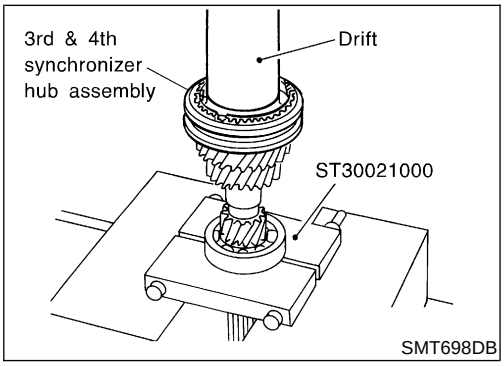

4. Position bearing replacer to the front side of input shaft front bearing.
- Align grooves of shifting insert and 3rd gear baulk ring. Then, press it onto 3rd & 4th synchronizer hub assembly using a drift.
5. Install 4th gear C-ring onto input shaft.

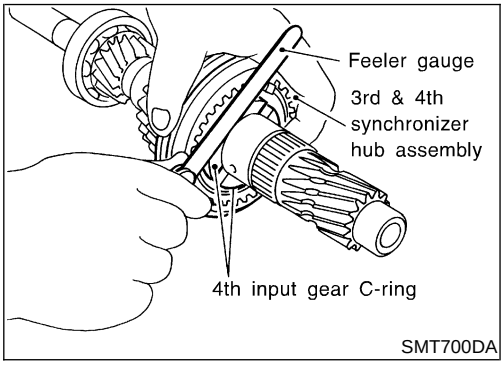

6. Measure the end play of 3rd & 4th synchronizer hub, and check if it is within allowable specification below.

   End play:

   0 - 0.06 mm (0 - 0.0024 in)
7. If not within specification, adjust the end play by changing thickness of 4th input gear C-ring.

   4th input gear C-ring:

   Refer to SDS, MT-91.

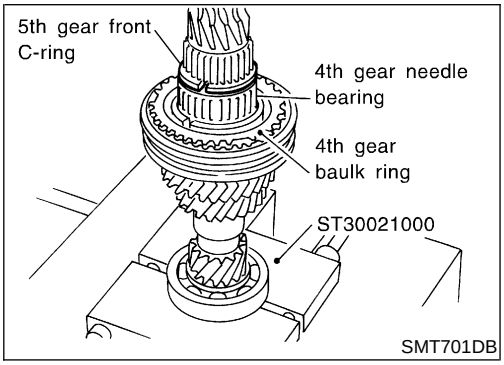

8. Install 4th gear needle bearing, 4th gear baulk ring, and 5th gear front C-ring.
9. Install 4th input gear.

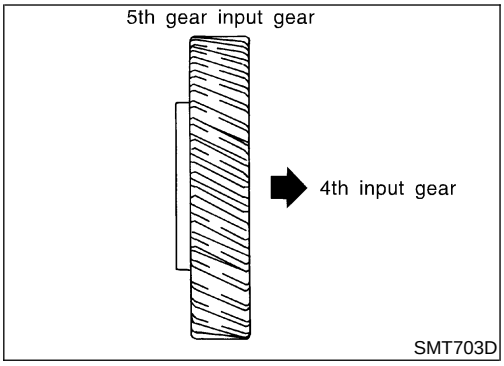

10. Position 5th input gear as shown in the figure, and install it on input shaft.

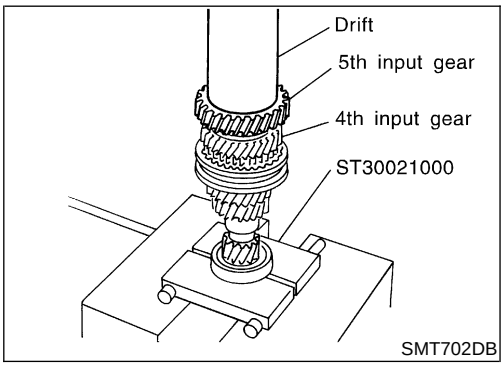

11. Install 5th input gear.

CAUTION:
Do not reuse 5th input gear.

12. Install 5th gear rear C-ring onto input shaft.

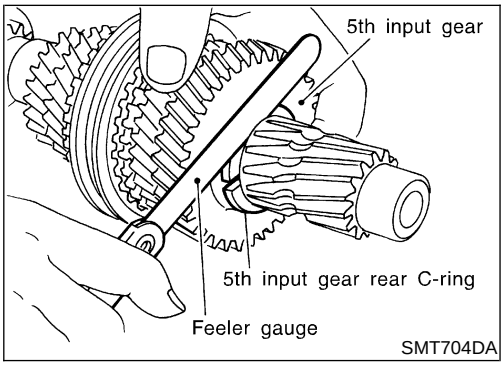

13. Measure the end play of 5th input gear, and check if it is within the allowable specification below.

    End play:
    0 - 0.06 mm (0 - 0.0024 in)

14. If not within specification, adjust the end play by changing thickness of the 5th input gear rear C-ring.

    5th input gear rear C-ring:
    Refer to SDS, MT-91.

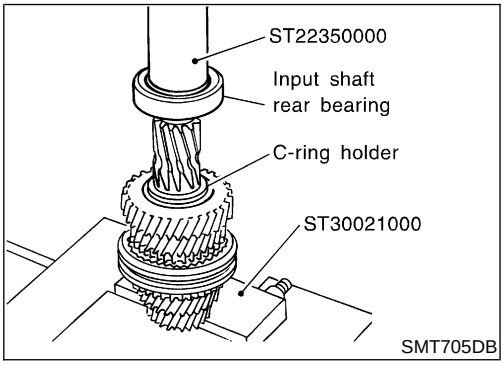

15. Install C-ring holder onto 5th gear rear C-ring.

CAUTION:
Do not reuse C-ring holder.

16. Install input shaft rear bearing.

CAUTION:
Install input shaft rear bearing with its brown surface facing the input gear side.

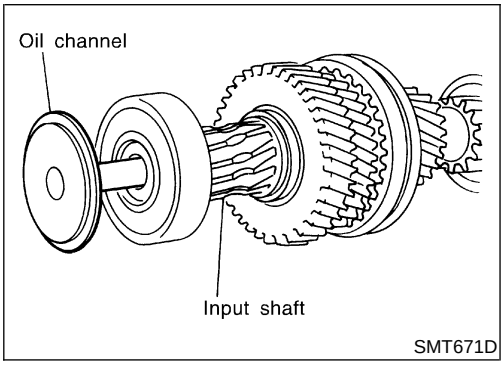

17. Install oil channel onto input shaft.
18. Measure gear end play as a final check. Refer to, MT-35.

Mainshaft and Gears

DISASSEMBLY

NLMT0059

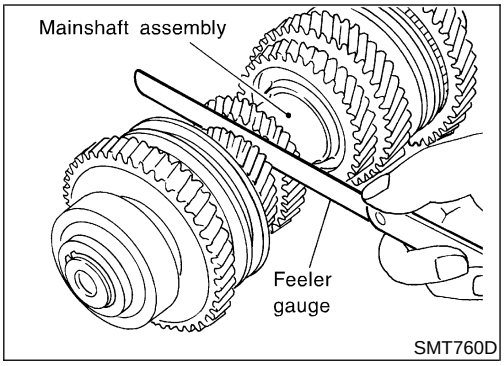

1. Before disassembly, measure gear end play.

   Gear end play:

   Refer to SDS, MT-90.

- If end play is not within the specificed limit, disassemble and check the parts.

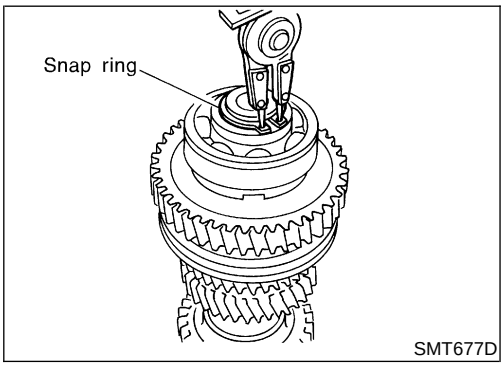

2. Remove snap ring.

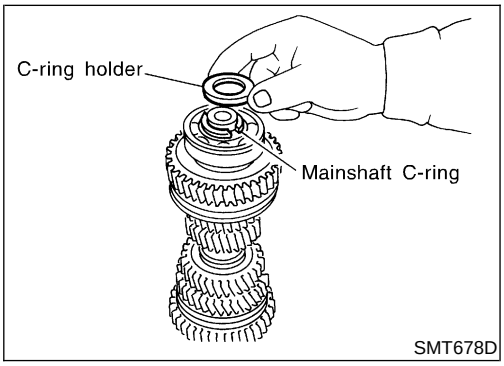

3. Remove C-ring holder and mainshaft C-ring.

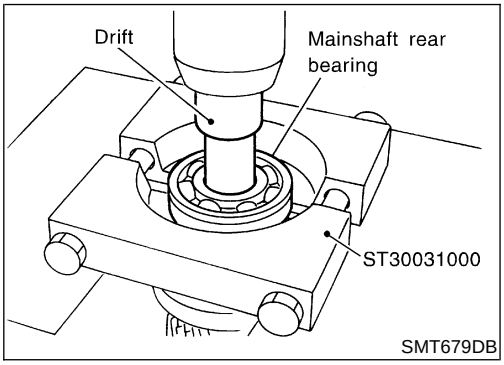

4. Press out mainshaft rear bearing from mainshaft.

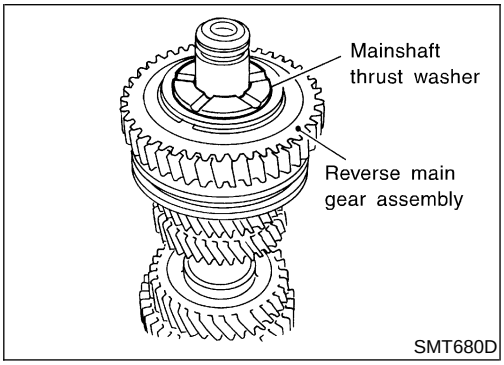

5. Remove mainshaft thrust washer.
6. Remove snap ring from mainshaft. Then, remove reverse main gear assembly, reverse gear needle bearing, and reverse gear baulk ring.

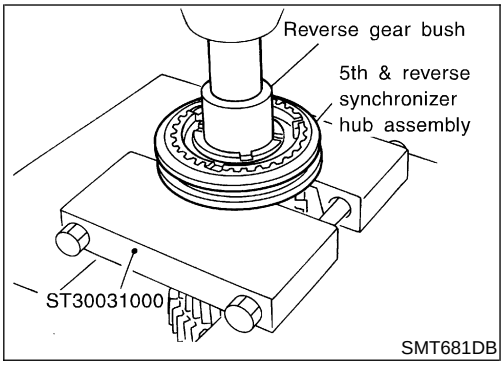

SMT681DB

7. Place bearing replacer between 5th & reverse synchronizer hub and 5th main gear, and press out both reverse gear bushing and 5th & reverse synchronizer assembly.
8. Remove 5th main gear, 5th gear baulk ring, and 5th gear needle bearing.

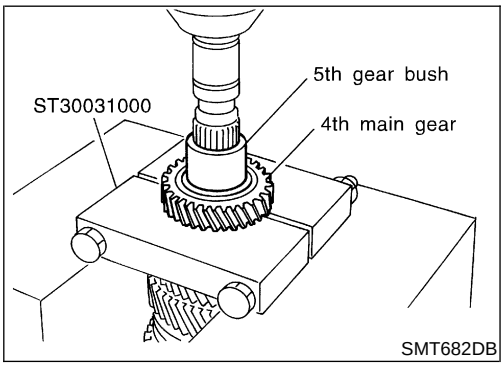

SMT682DB

9. Place bearing replacer between 3rd and 4th main gears, and press out both 5th gear bushing and 4th main gear.

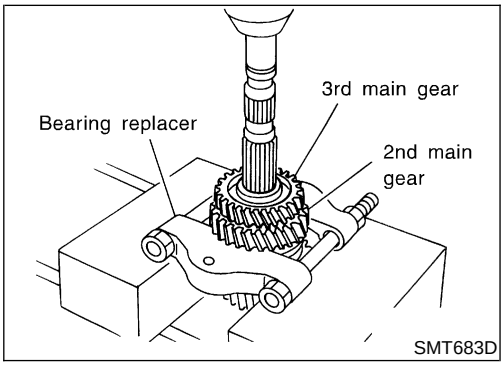

SMT683D

10. Remove mainshaft adjusting shim and spacer.
11. Place bearing replacer between 2nd main gear and 1st & 2nd synchronizer hub, and press out both 3rd and 2nd main gears.

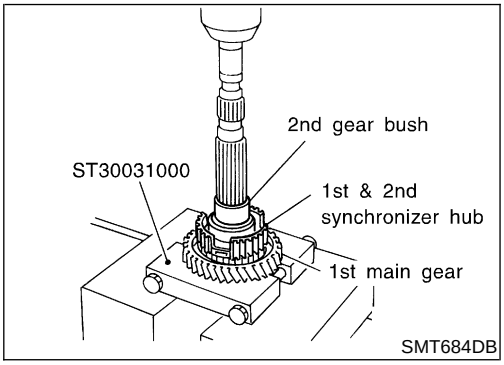

SMT684DB

12. Remove 2nd double cone assembly, 2nd gear bushing, and coupling sleeve assembly.
13. Place bearing replacer on 1st gear front side, and press out all of 2nd gear bushing, 1st & 2nd synchronizer hub, 1st main gear, and 1st double cone.
14. Remove 1st gear needle bearing.

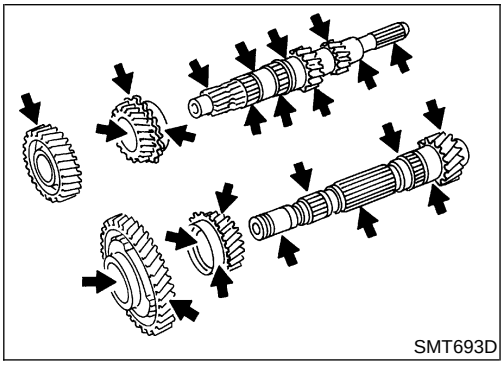
SMT693D

INSPECTION

NLMT0060

Mainshaft and Gears

NLMT0060S01

- Check shaft for cracks, wear or bending.
- Check gears for excessive wear, chips or cracks.

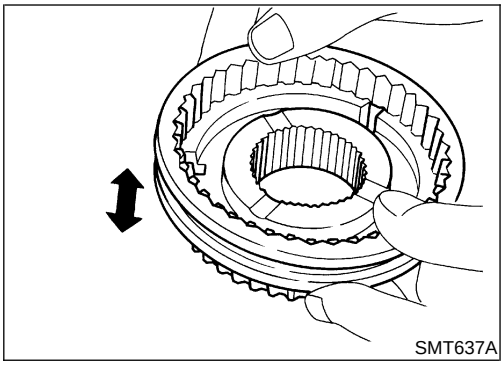

Synchronizers

NLMT0060S02

- Check spline area of coupling sleeves, hubs and gears for wear or cracks.
- Check baulk rings for cracks or deformation.
- Check insert springs for wear or deformation.

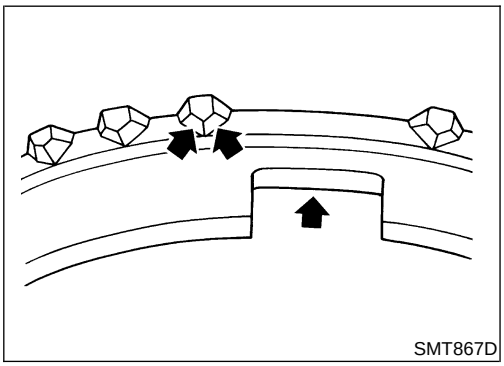

- If any crack, damage, or excessive wear is found on cam face of baulk ring or working face of insert, replace it.

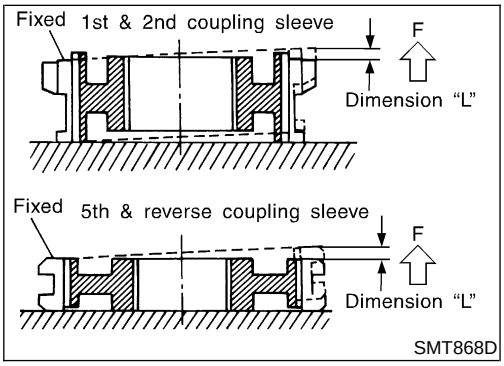

- Measure the movement (play, dimension "L") of 1st & 2nd coupling sleeve and 5th & reverse coupling sleeve with their end fixed and the other end lifted as shown in the figure. If the movement exceeds specification, replace the sleeve.

  Coupling sleeve length "L":
  Refer to SDS, MT-90.

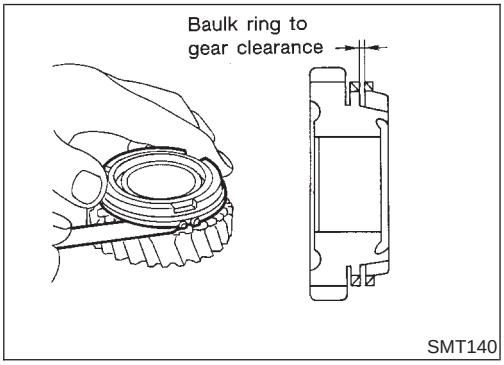

- Measure clearance between baulk ring and gear.

  Clearance between baulk ring and gear:
  Refer to SDS, MT-90.

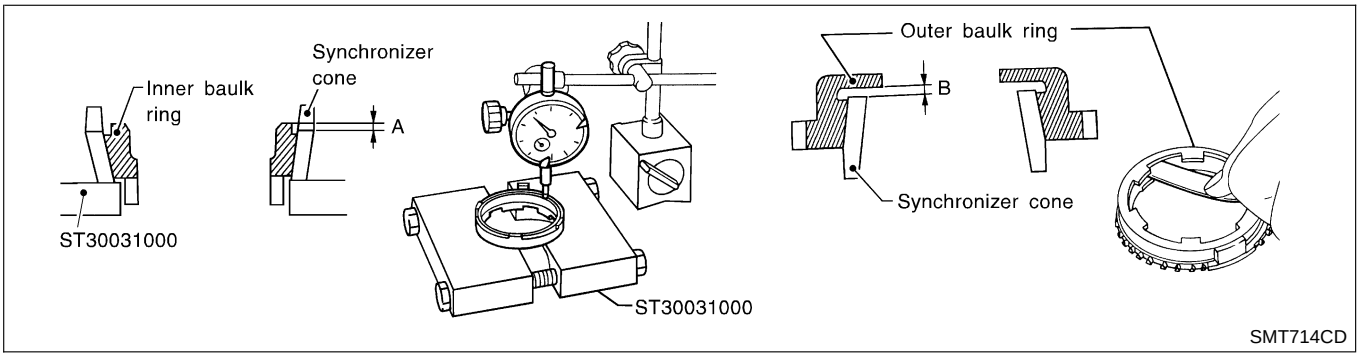

- Measure wear of 1st and 2nd baulk ring.

a) Place baulk rings in position on synchronizer cone.

b) While holding baulk ring against synchronizer cone as far as it will go, measure dimensions "A" and "B".

Standard:

A 0.6 - 0.8 mm (0.024 - 0.031 in)

B 0.6 - 1.1 mm (0.024 - 0.043 in)

Wear limit:

0.2 mm (0.008 in)

- **If dimension "A" or "B" is smaller than the wear limit, replace outer baulk ring, inner baulk ring and synchronizer cone as a set.**

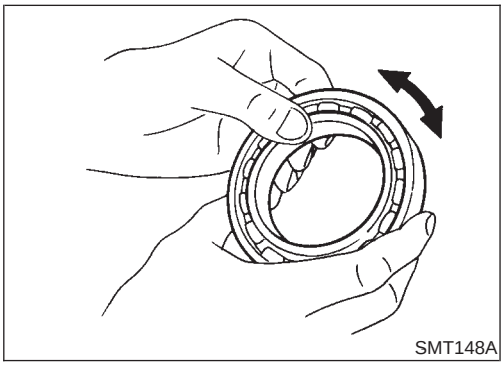
SMT148A

Bearing

NLMT0060S03

- Make sure bearings roll freely and are free from noise, cracks, pitting or wear.

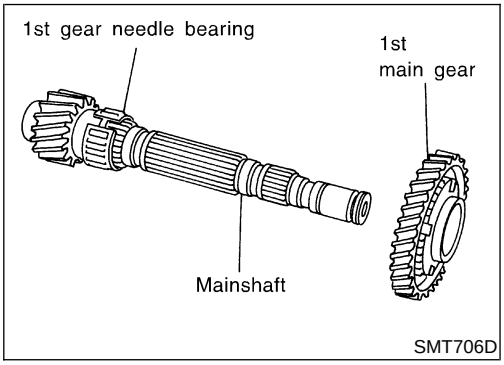

SMT706D

ASSEMBLY

NLMT0061

1. Install 1st gear needle bearing and 1st main gear onto mainshaft.
2. Install 1st double cone assembly onto mainshaft.

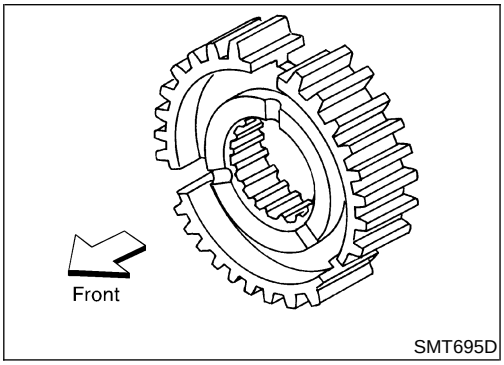

SMT695D

3. Install 1st & 2nd synchronizer hub with its three grooves facing the front side (1st main gear side) onto mainshaft.

CAUTION:

Do not reuse 1st & 2nd synchronizer hub.

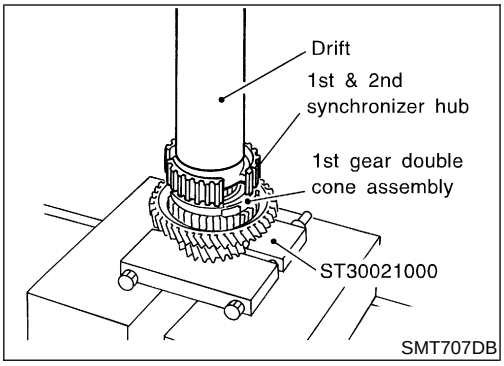

4. Install 1st & 2nd synchronizer hub.

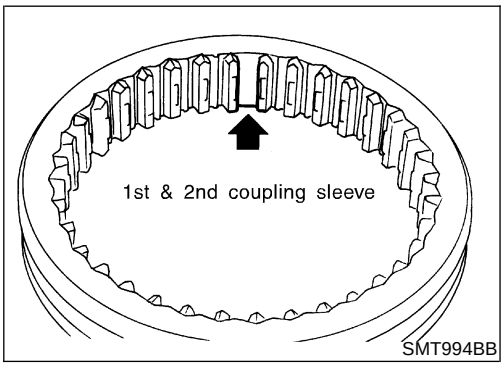

5. Install insert spring onto 1st & 2nd coupling sleeve.

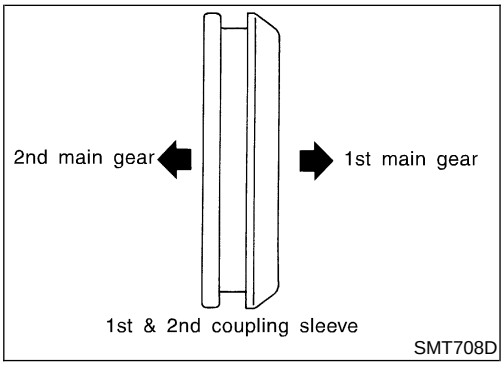

6. Install 1st & 2nd coupling sleeve with its chamfered surface facing the 1st main gear side onto 1st & 2nd synchronizer hub.

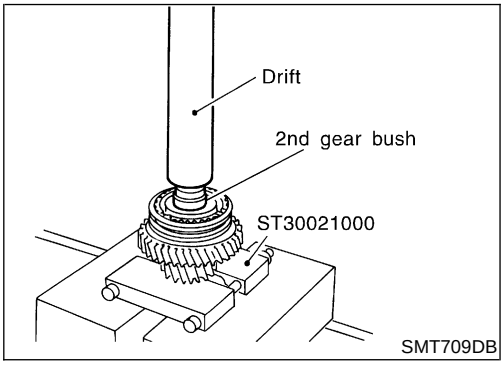

7. Install 2nd gear bushing with its flange surface facing 1st & 2nd synchronizer hub side.

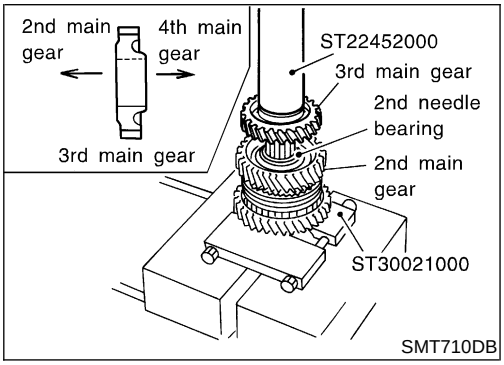

8. Install 2nd needle bearing, 2nd double cone assembly, and 2nd main gear onto mainshaft.
9. Position 3rd main gear as shown in the figure, and install it.

CAUTION:
Do not reuse 3rd main gear.

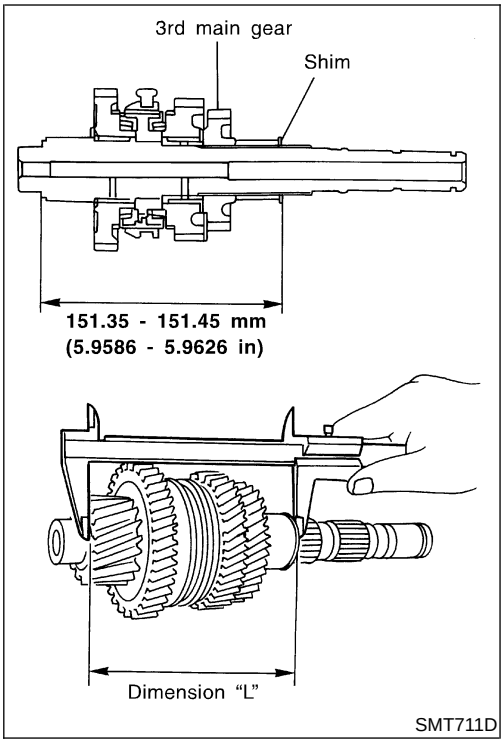

10. Install spacer and mainshaft adjusting shim onto mainshaft.
11. Select a mainshaft adjusting shim suitable to satisfy the following specification of dimension "L" and install it onto mainshaft.

Specification of dimension "L":
151.35 - 151.45 mm (5.9586 - 5.9626 in)
Mainshaft adjusting shims:
Refer to SDS, MT-94.

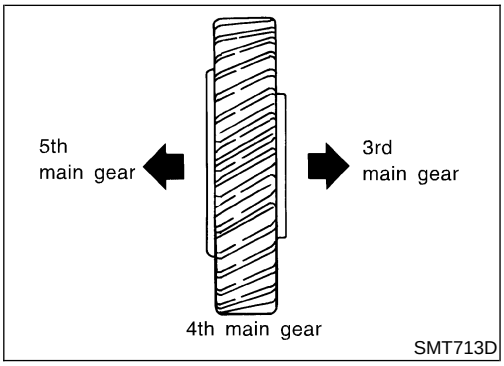

12. Position 4th main gear as shown in the figure, and install it onto mainshaft.

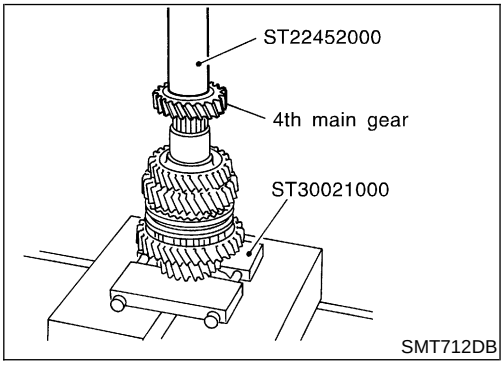

13. Install 4th main gear onto mainshaft.

CAUTION:
Do not reuse 4th main gear.

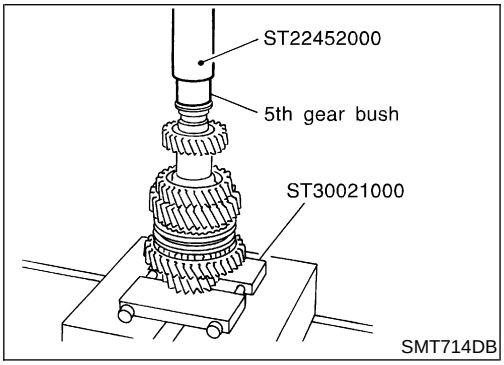

14. Install 5th gear bushing with its flange surface facing the 4th main gear side.

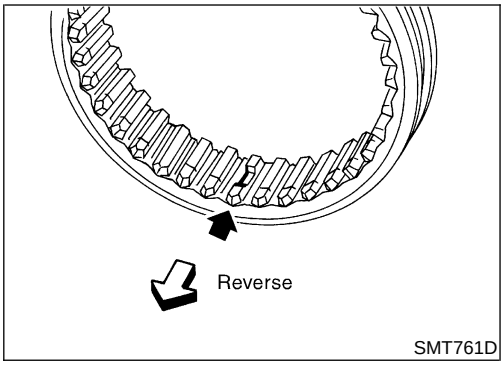

15. Install 5th needle bearing, 5th main gear, and 5th gear baulk ring onto mainshaft.

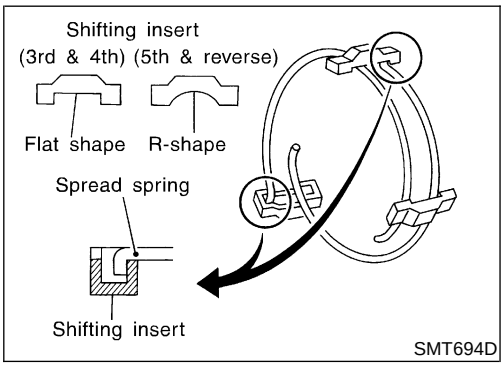

16. Being careful of the following points, install spread spring, shifting insert, and 5th & reverse synchronizer hub onto 5th & reverse coupling sleeve.
- Pay attention to the shape of spread spring and shifting insert for correct assembly.
  Do not install spread spring hook onto the same shifting insert.

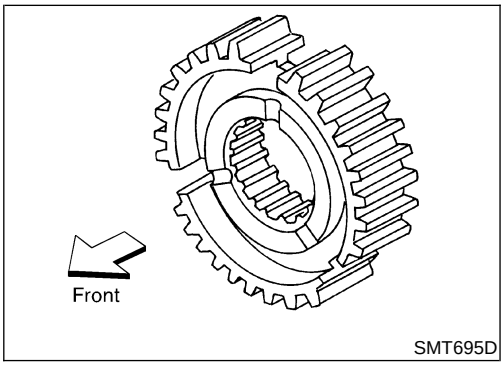

- Install synchronizer hub with its three grooves facing the front side (5th main gear side).

CAUTION:
Do not reuse 5th & reverse synchronizer hub.

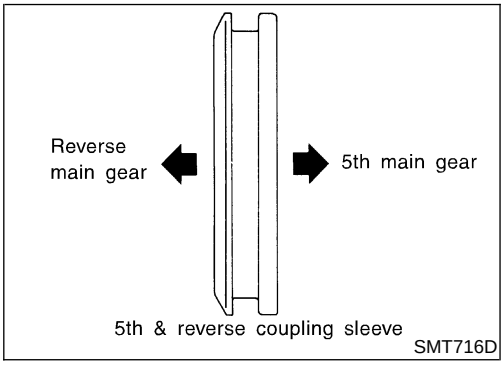

- Install 5th & reverse coupling sleeve with its chamfered surface facing the reverse main gear side.

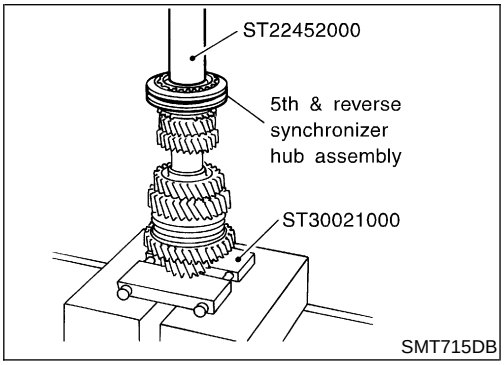

17. Install 5th & reverse synchronizer hub assembly.

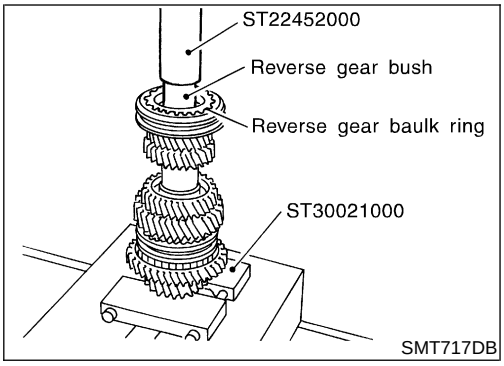

18. Install reverse gear baulk ring.
19. Install reverse gear busing.
20. Install reverse gear needle bearing.

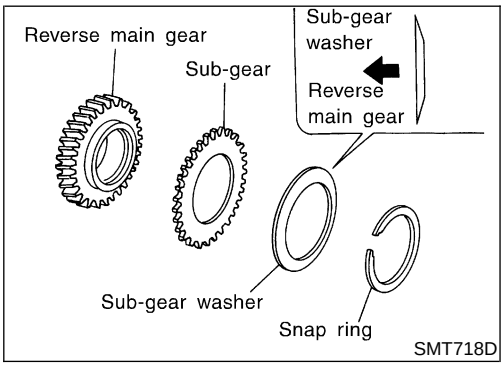

21. Install sub-gear, sub-gear washer, and snap ring onto reverse main gear.

CAUTION:

- **Pay attention to direction of sub-gear washer.**
- **Do not reuse snap ring.**

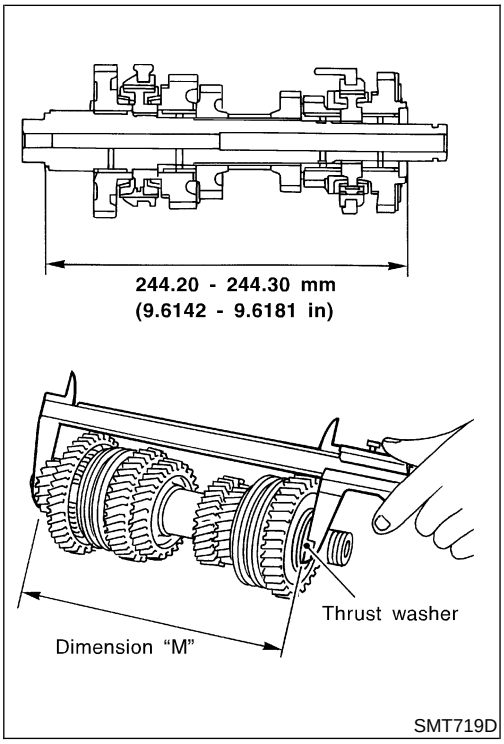

22. Install reverse main gear assembly onto mainshaft.
23. Select a thrust washer suitable to satisfy the following specification of dimension "M" (as shown in the figure), and install it onto mainshaft.

    Specification of dimension "M":
    244.20 - 244.30 mm (9.6142 - 9.6181 in)
    Available mainshaft thrust washers:
    Refer to SDS, MT-95.

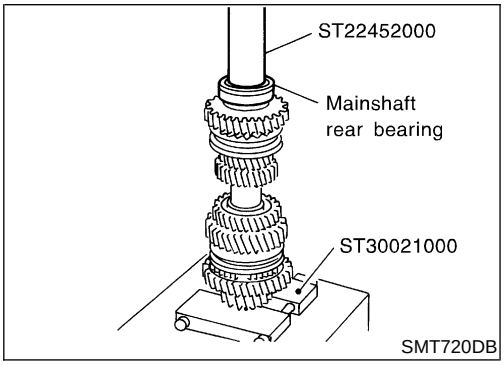

24. Install mainshaft rear bearing.

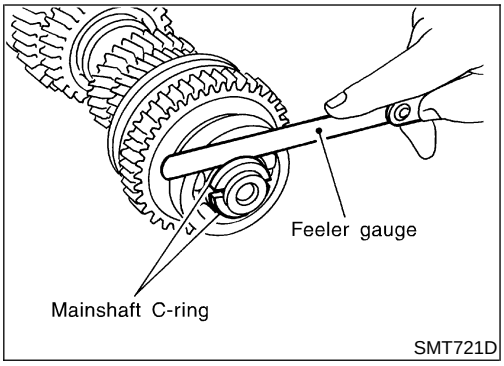

25. Install mainshaft C-ring.
26. Using feeler gauge, measure the end play of mainshaft rear bearing, and check if it satisfies the following specification.

    End play:

    0 - 0.06 mm (0 - 0.0024 in)

    Mainshaft C-rings:

    Refer to SDS, MT-92.

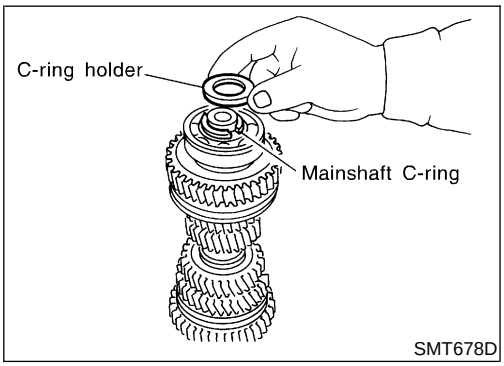

27. Install C-ring holder.

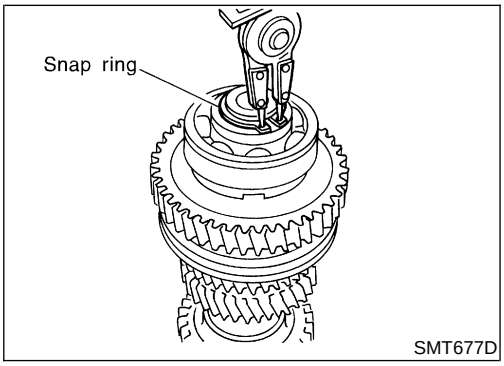

28. Install snap ring.
29. Measure gear end play as a final check. Refer to, MT-40.

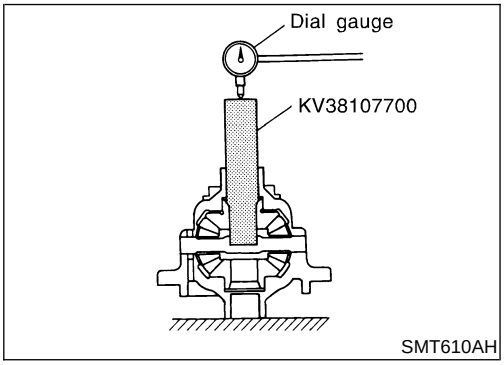

Final Drive

PRE-INSPECTION

NLMT0062

- Check the clearance between side gear and differential case as follows.

1. Clean final drive assembly sufficiently to prevent side gear thrust washer, differential case, side gear, and other parts from sticking by gear oil.

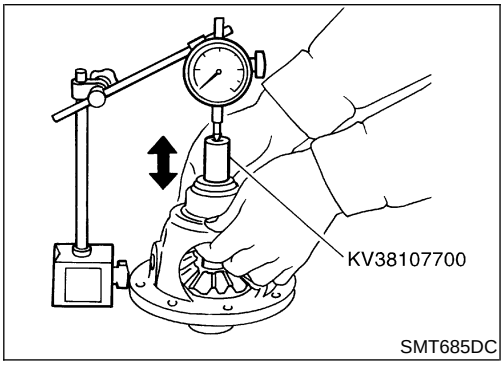

2. Upright the differential case so that the side gear to be measured faces upward.
3. Place final drive adapter and dial gauge onto side gear. Move side gear up and down, and measure the clearance.

   Clearance between side gear and differential case:

   0.1 - 0.2 mm (0.004 - 0.008 in)
4. If not within specification, adjust the clearance by changing thrust washer thickness.
5. Turn differential case upside down, and measure the clearance between side gear and differential case on the other side in the same way.

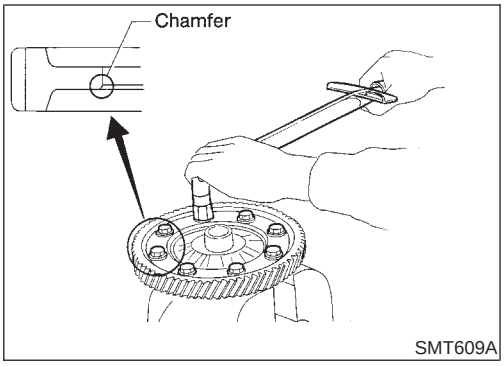

DISASSEMBLY

NLMT0063

1. Remove mounting bolts. Then, separate the final gear from differential case.
2. Make a notch and remove speedometer drive gear using a scraper or other suitable tool.

- **Bearing replacer cannot be positioned unless speedometer drive gear is removed.**

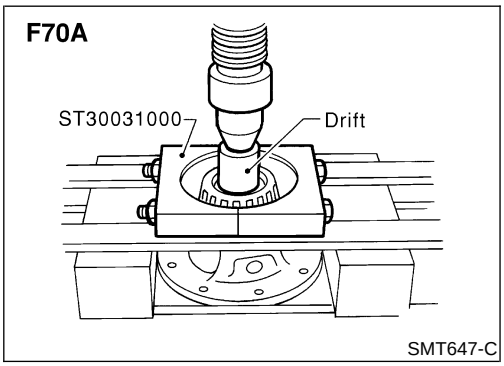

3. Remove differential side bearing of final gear side.
4. Turn differential case upside down, and remove differential side bearing of speedometer drive gear side.

- **Be careful not to mix up the differential side bearings.**

5. Remove speedometer stopper.

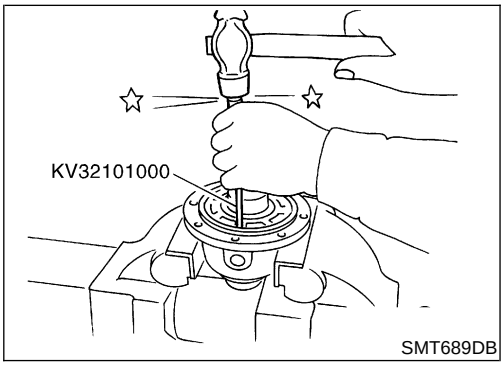

6. Remove lock pins from pinion mate shaft.

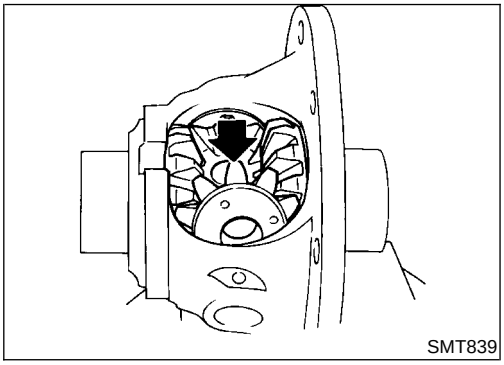

7. Remove pinion mate shaft.
8. Rotate pinion mate gear, and remove pinion mate gear, pinion mate thrust washer, side gear, and side gear thrust washer from differential case.

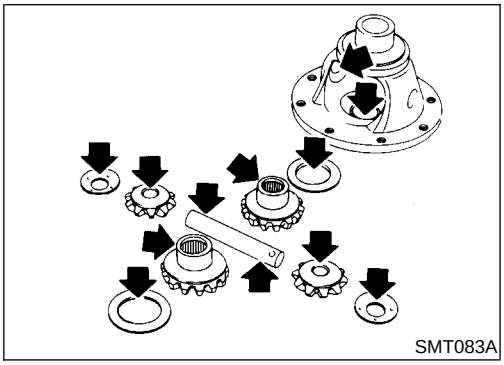

INSPECTION

NLMT0064

Gear, Washer, Shaft and Case

NLMT0064S01

- Check mating surfaces of differential case, side gears and pinion mate gears.
- Check washers for wear.

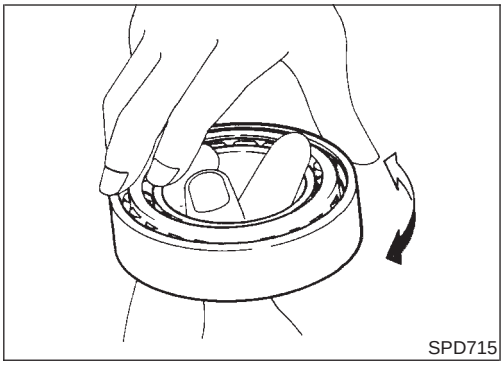
SPD715

Bearing

NLMT0064S03

- Make sure bearings roll freely and are free from noise, cracks, pitting or wear.
- **When replacing tapered roller bearing, replace outer and inner race as a set.**

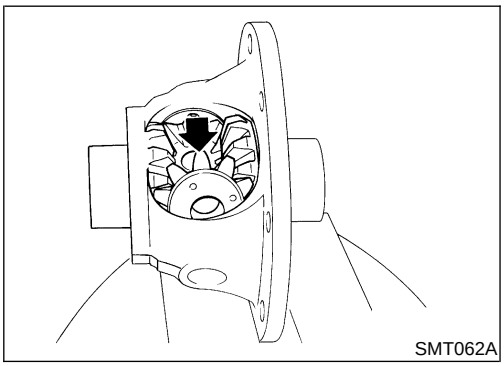
SMT062A

ASSEMBLY

NLMT0065

1. Apply gear oil to sliding area of differential case, each gear, and thrust washer.
2. Install side gear thrust washer and side gear into differential case.
3. Position pinion mate gear and pinion mate thrust washer diagonally, and install them into differential case while rotating.

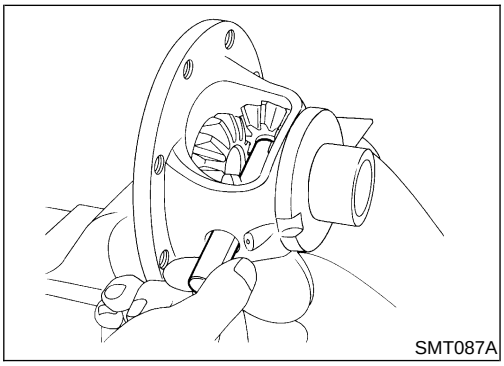
SMT087A

4. Insert pinion mate shaft into differential case.

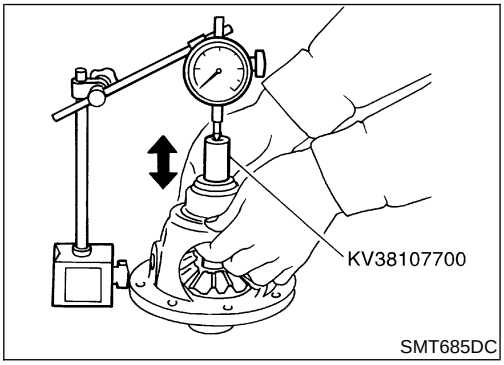

SMT685DC

5. Upright the differential case so that its side gear to be measured faces upward.
6. Place preload adapter and dial gauge onto side gear. Move side gear up and down, and measure the clearance.
7. Turn differential case upside down, and measure the clearance between side gear and differential case on the other side in the same way.

   Clearance of side gear and differential case:
   0.1 - 0.2 mm (0.004 - 0.008 in)
   Differential side gear thrust washers:
   Refer to SDS, MT-95.

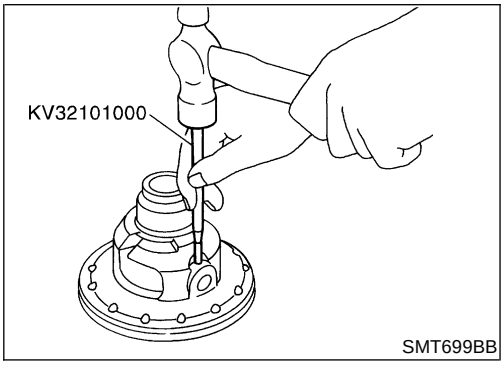

SMT699BB

8. Install retaining pin.

- **Make sure that retaining pin is flush with case.**

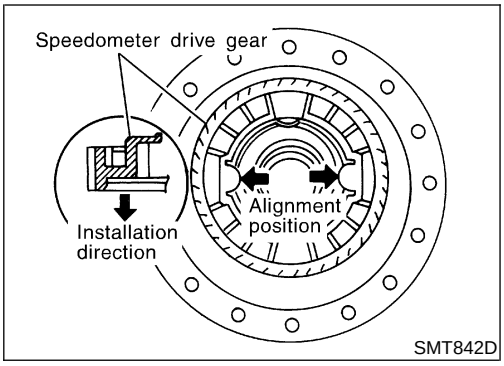

9. Align and install speedometer drive gear into differential case.
10. Install speedometer stopper.

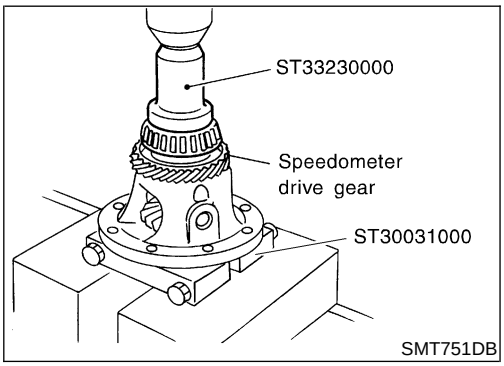

11. Install differential side bearing.
12. Turn differential case upside down, and install another differential side bearing on the other side in the same way.

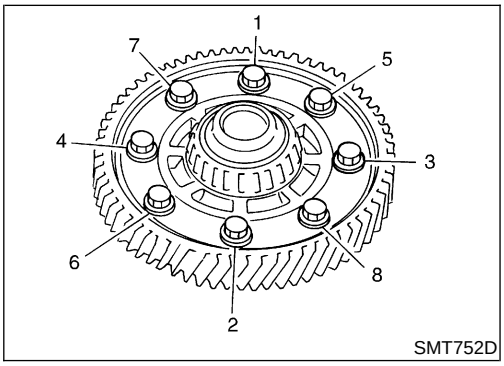

13. Install differential gear into differential case. Apply sealant onto mounting bolts, and tighten them in order as shown in the figure with specified torque.

Tightening torque:
Refer to MT-28.

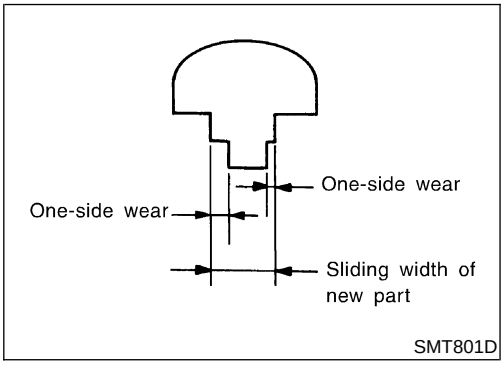

Shift Control Components

INSPECTION

NLMT0066

- Check if the width of shift fork hook (sliding area with coupling sleeve) is within allowable specification below.

Item	One-side wear specification	Sliding width of new part
1st & 2nd	0.2 mm (0.008 in)	7.80 - 7.93 mm (0.3071 - 0.3122 in)
3rd & 4th	0.2 mm (0.008 in)	7.80 - 7.93 mm (0.3071 - 0.3122 in)
5th & reverse	0.2 mm (0.008 in)	7.80 - 7.93 mm (0.3071 - 0.3122 in)

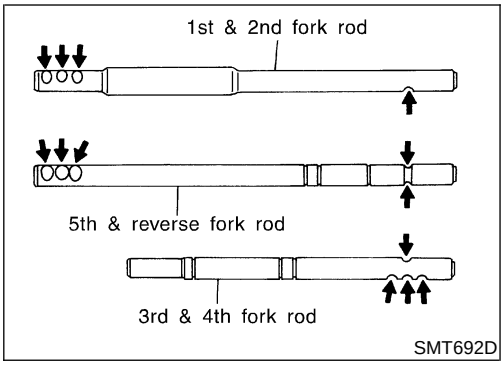

- Check if shift check groove of fork rod or 5th & reverse check groove is worn, or has any other abnormalities.

Clutch Housing

NLMT0067S01

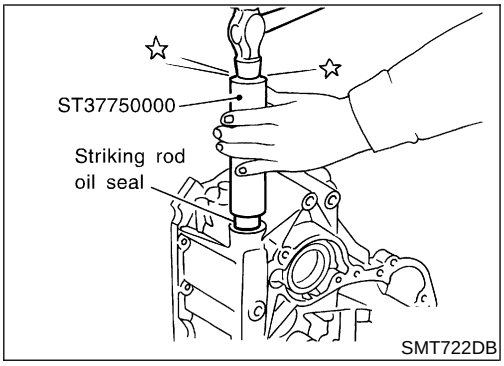

1. Hammer the striking rod oil seal into clutch housing as far as it will go.

CAUTION:
Do not reuse striking rod oil seal.

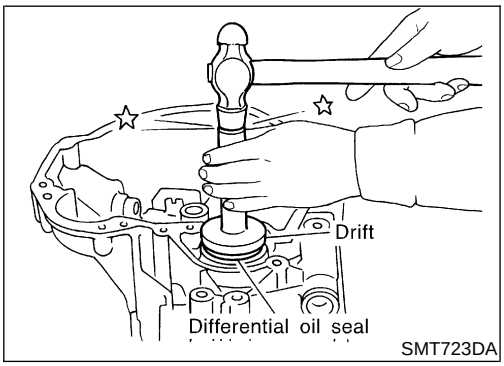

2. Hammer the differential oil seal into clutch housing until it becomes flush with clutch housing end face.

CAUTION:
Do not reuse differential oil seal.

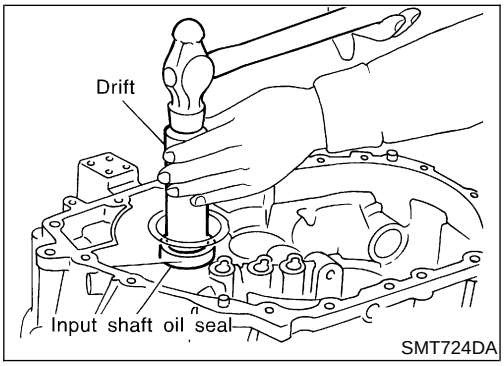

3. Hammer input shaft oil seal into clutch housing as far as it will go.

CAUTION:
Do not reuse input shaft oil seal.

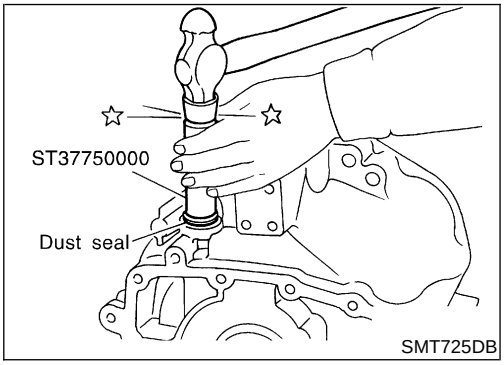

4. Hammer the dust seal into clutch housing as far as it will go.

CAUTION:
Do not reuse dust seal.

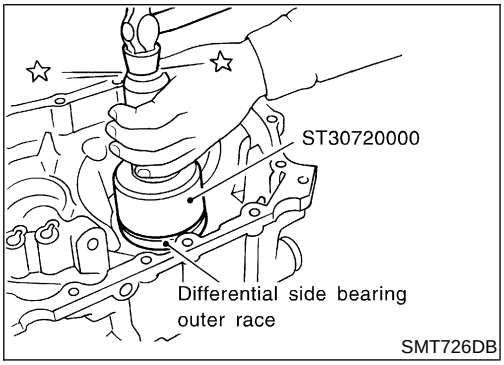

5. Install outer race of differential side bearing.

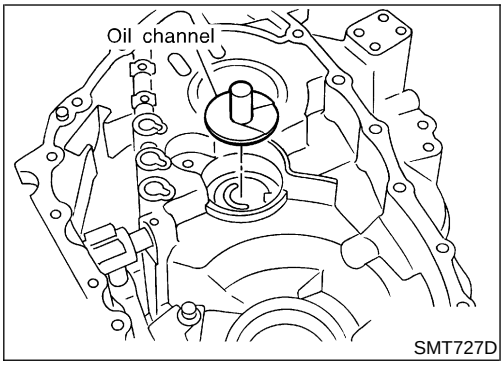

6. Install new oil channel (mainshaft).

CAUTION:
Pay attention to installation direction of oil channel.

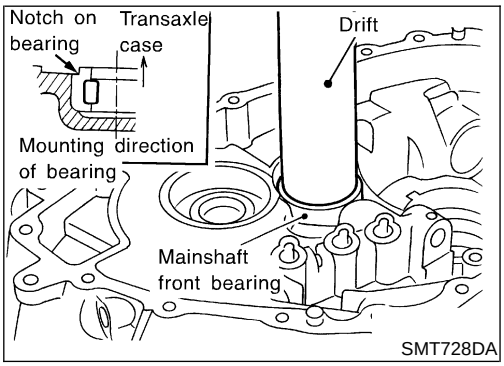

7. Align the notches on mainshaft front bearing and transaxle case. Then, install mainshaft front bearing.

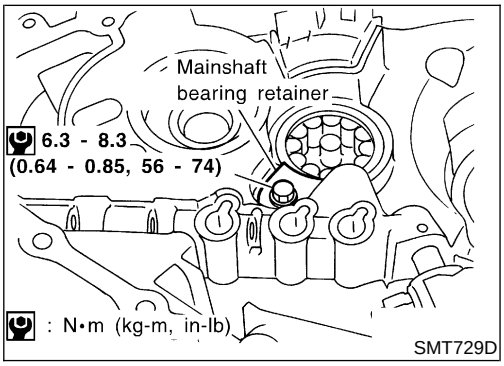

8. Install mainshaft bearing retainer, and tighten bolts with specified torque.

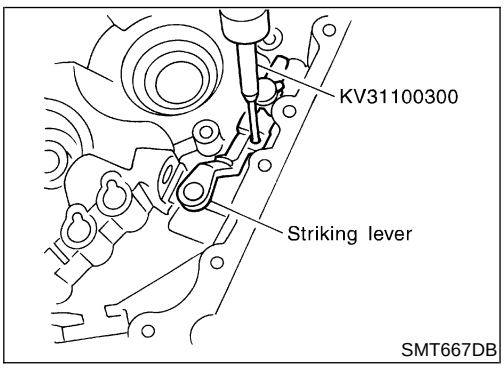

9. Attach boot, striking rod, and striking lever to clutch housing. And install retaining pin for selector lever.

CAUTION:
- **Before installing striking rod, wrap the end with a vinyl tape or the like to prevent oil seal from being damaged.**
- **Do not reuse retaining pin.**

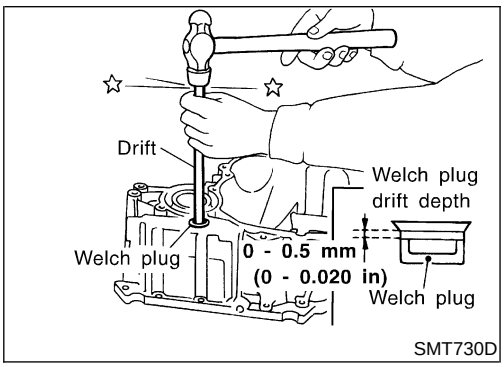

10. Hammer the welch plug (striking lever side) with a general-purpose drift [OD: 12 mm (0.47 in)].

CAUTION:
Do not reuse welch plug.

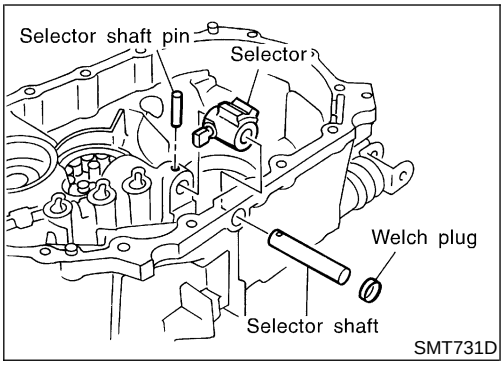

11. Install selector, selector shaft, and selector shaft pin into clutch housing.

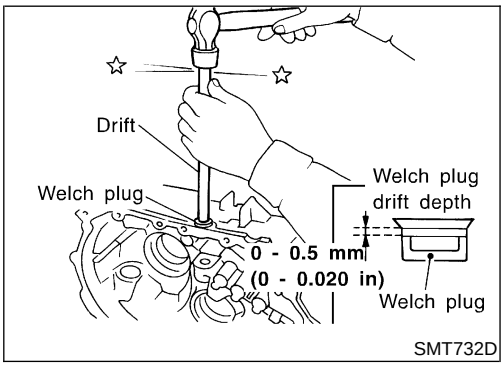

12. Hammer the welch plug (selector shaft side) with a general-purpose drift [OD: 12 mm (0.47 in)].

CAUTION:
Do not reuse welch plug.

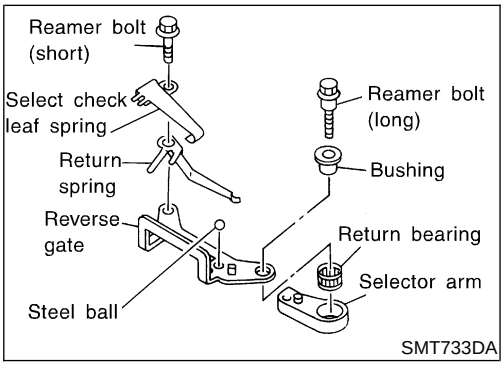

13. Install select check leaf spring, return spring, steel ball, reverse gate, selector arm, bushing, and return bearing. Then, tighten two reamer bolts with specified torque.

CAUTION:
Use correct reamer bolts for each installation point, because each bolt has a different length.

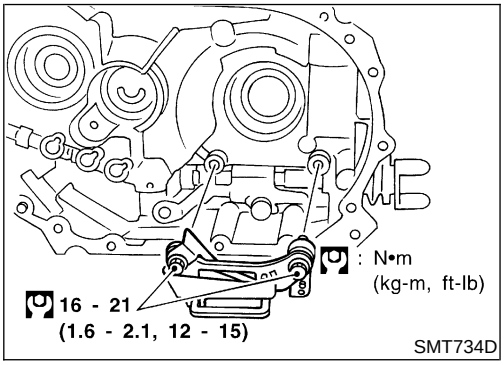

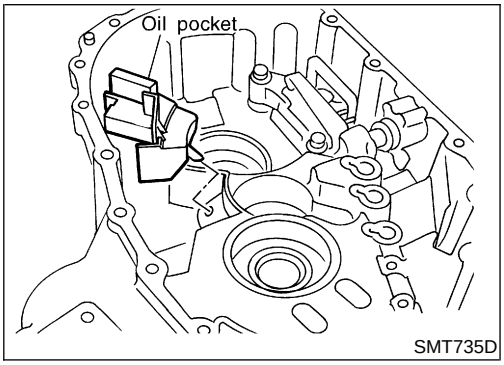

14. Install oil pocket.

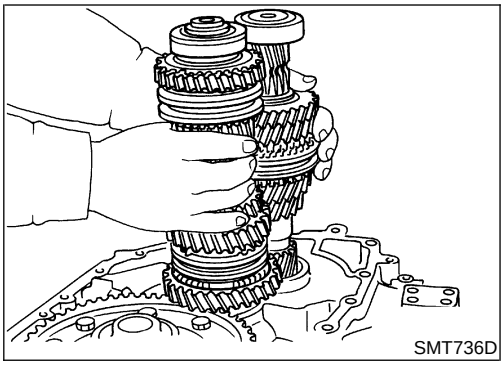

15. Install differential assembly, input shaft assembly, and main-shaft assembly into clutch housing.

CAUTION:
Be careful not to damage input shaft oil seal during installation of input shaft assembly.

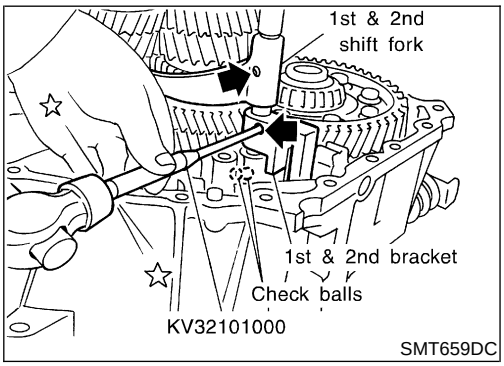

16. Install 5th & reverse shift fork.
17. Install 1st & 2nd shift fork, bracket, and fork rod.
18. Install retaining pin for 1st & 2nd bracket.

CAUTION:
Do not reuse retaining pin.

19. Install two check balls.

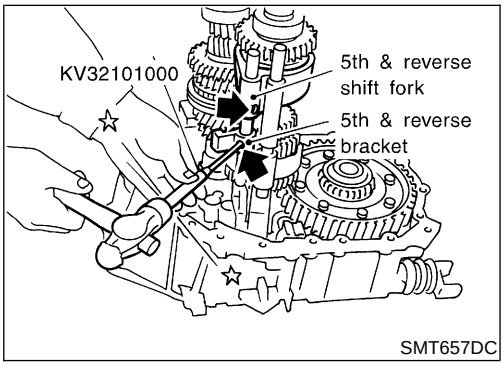

20. Install interlock pin into 5th & reverse fork rod.
21. Install reverse switch bracket, 5th & reverse bracket, and fork rod.
22. Install retaining pin for 5th & reverse shift fork and reverse switch bracket.

CAUTION:
Do not reuse retaining pin.

23. Install 5th & reverse bracket stopper ring.

CAUTION:
Do not reuse stopper pin.

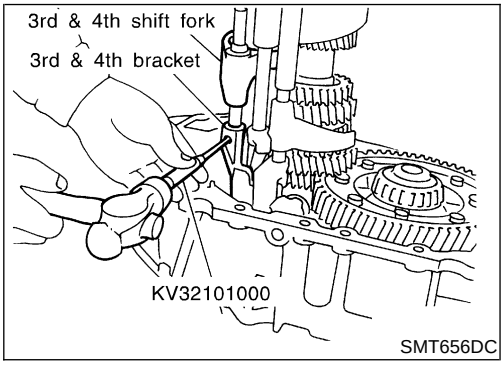

24. Install check ball and interlock plunger.
25. Install 3rd & 4th shift fork, bracket, and fork rod.
26. Install 3rd & 4th bracket retaining pin.

CAUTION:
Do not reuse retaining pin.

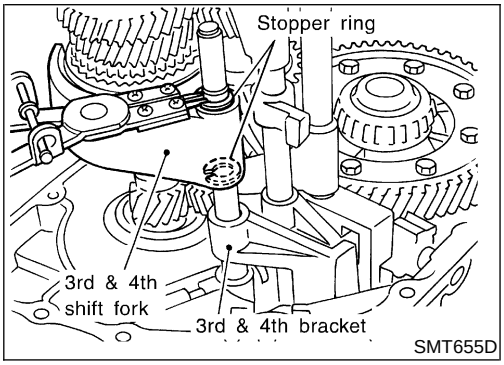

27. Install 3rd & 4th shift fork stopper ring.

CAUTION:
Do not reuse stopper ring.

28. Install check ball, check pin, and check spring, and apply Three Bond TB1215, Loctite Part No. 51813 or equivalent onto check plug. Then, tighten it with specified torque.

Tightening torque:
Refer to MT-27.

Transaxle Case

NLMT0067S02

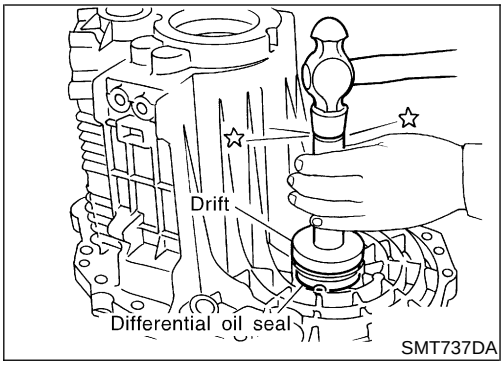

1. Insert differential oil seal into differential case until it becomes flush with case end face.

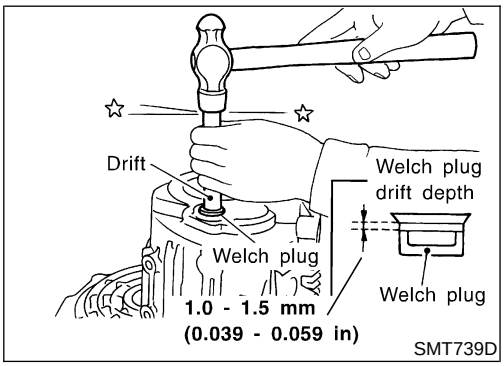

2. Install welch plug into transaxle case.

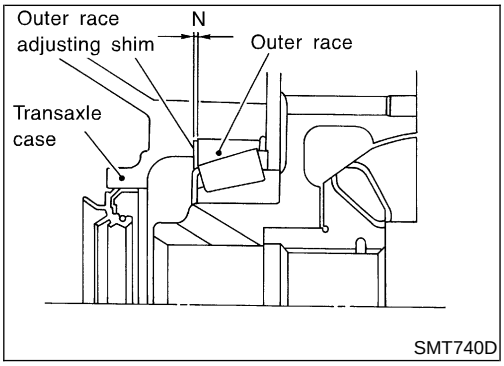

3. Calculate dimension “N” (thickness of adjusting shim) using the following procedure to satisfy specification of end play for differential side bearing.

   End play: 0.15 - 0.21 mm (0.0059 - 0.0083 in)

   Dimension “N” = (N1 – N2) + End play

   N: Thickness of adjusting shim

   N1: Distance between clutch housing case end face and mounting face of adjusting shim

   N2: Distance between differential side bearing and transaxle case

   Differential side bearing adjusting shims:

   Refer to SDS, MT-96.

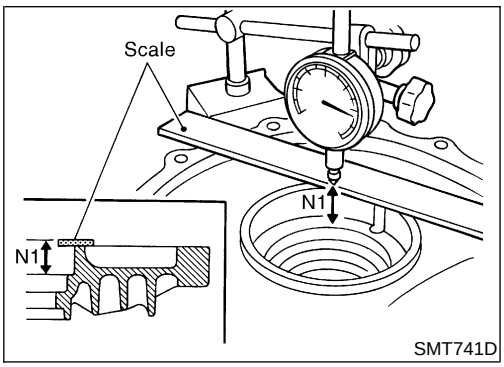

a. Using dial gauge and scale, measure dimension “N1” between clutch housing case end face and mounting face of adjusting shim.

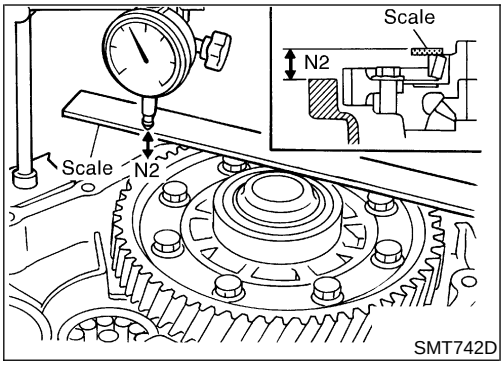

b. Install outer race onto differential side bearing on final gear side. Holding lightly the outer race horizontally by hand, rotate final gear five times or more (for smooth movement of bearing roller).

c. Using dial gauge and scale as shown in the figure, measure dimension "N2" between differential side bearing outer race and transaxle case end face.

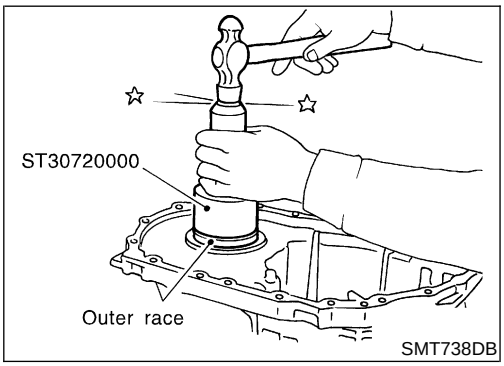

4. Install selected shim and bearing outer race.

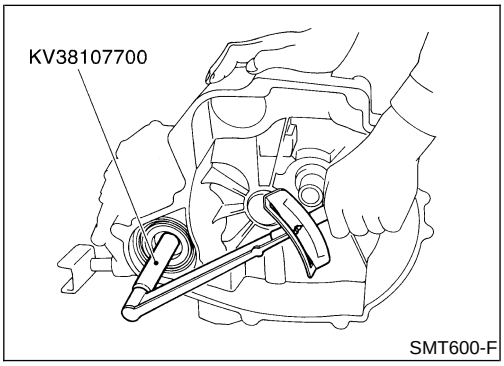

5. Measure turning torque of final drive assembly.

Turning torque of final drive assembly (New bearing):

2.9 - 6.9 N·m (30 - 70 kg-cm, 26 - 61 in-lb)

- **When old bearing is used again, turning torque will be slightly less than the above.**
- **Make sure torque is close to the specified range.**
- **Changes in turning torque of final drive assembly per revolution should be within 1.0 N·m (10 kg-cm, 8.7 in-lb) without binding.**

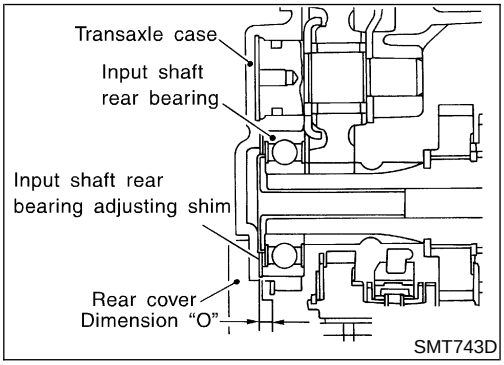

6. Calculate dimension "O" (thickness of adjusting shim) using the following procedure to satisfy specification of end play for input shaft rear bearing.

End play: 0 - 0.06 mm (0 - 0.0024 in)

Dimension "O" = (O1 – O2) + End play

O: Thickness of adjusting shim

O1: Distance between transaxle case end face and mounting face of adjusting shim

O2: Distance between clutch housing case end face and end face of input shaft rear bearing

Input shaft rear bearing adjusting shims:

Refer to SDS, MT-93.

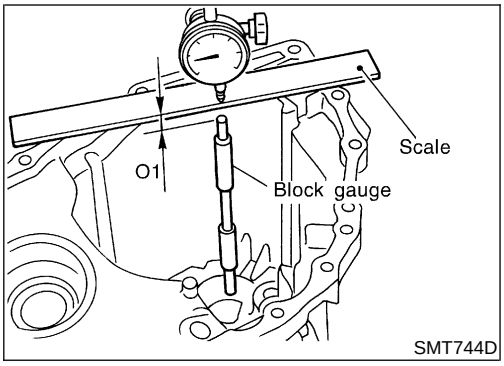

a. Using block gauge, scale, and dial gauge, measure dimension "O1" between transaxle case end face and mounting face of adjusting shim.

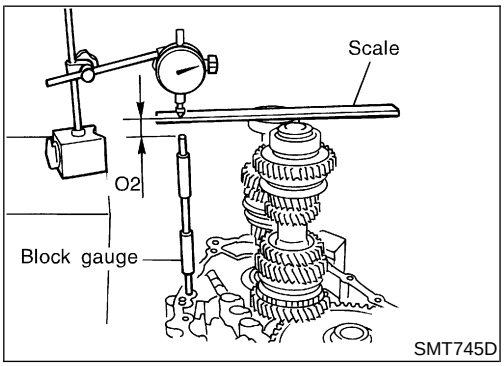

b. Using gauge block, scale, and dial gauge as shown in the figure, measure dimension "O2" between clutch housing case end face and end face of input shaft rear bearing.

7. Install selected input shaft rear bearing adjusting shim onto input shaft.

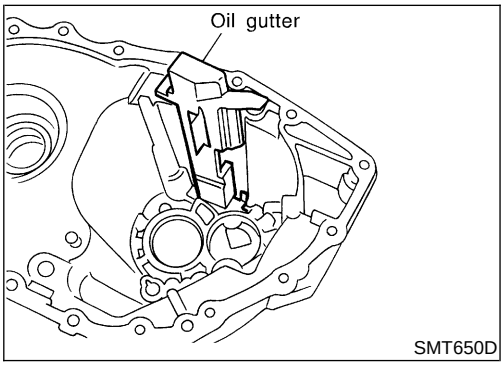

8. Install oil gutter into transaxle case.

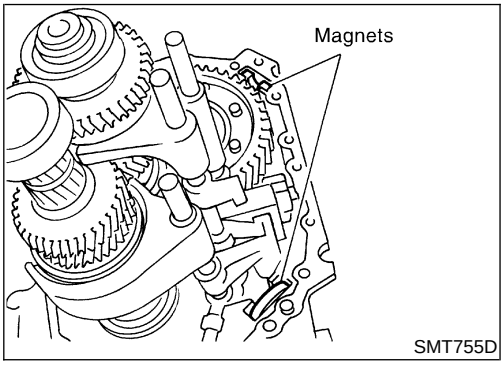

9. Install two magnets.

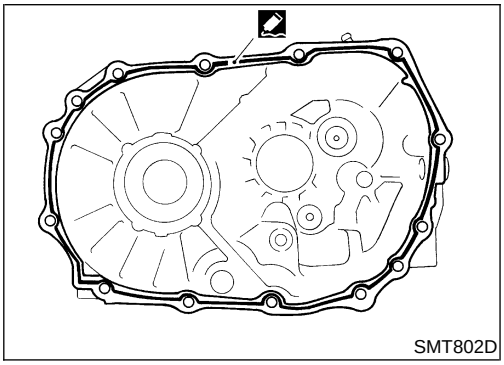

10. Clean mating surfaces of clutch housing and transaxle case. Check for cracks and damage. Then, apply Three Bond TB1215, Loctite Part No. 51813 or equivalent.

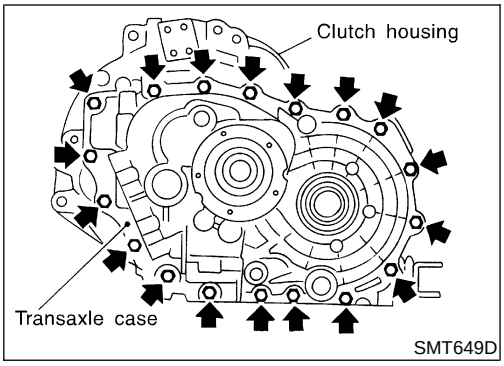

11. Install transaxle case onto clutch housing, and tighten mounting bolts with specified torque.

    Tightening torque:

    Refer to MT-25.

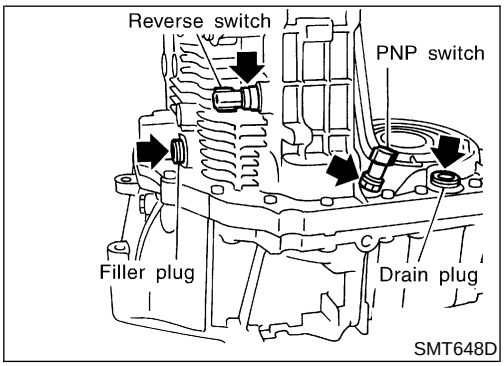

12. Apply Three Bond TB1215, Loctite Part No. 51813 or equivalent to threads of reverse switch, PNP switch, and drain plug, and install them. (Fill the case with oil before installation of filler plug.)
13. Install speedometer pinion assembly.

CAUTION:

Do not reuse O-ring.

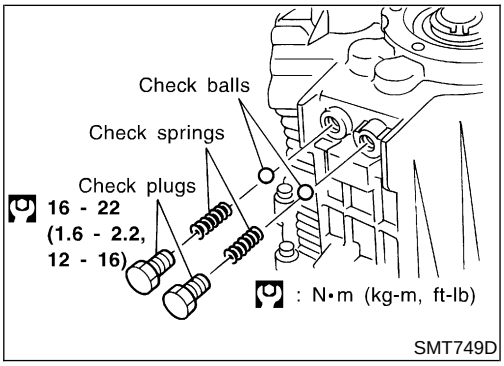

14. Install check springs and check balls. Apply sealant to the thread on the check plug, and install it.

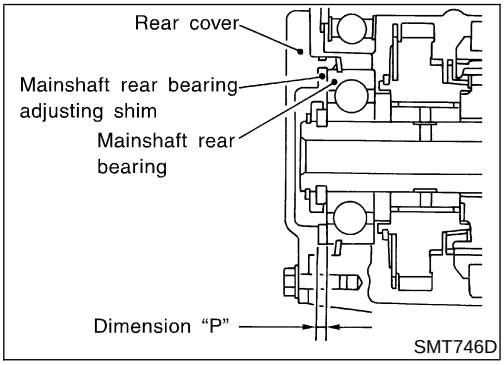

15. Calculate thickness of adjusting shim using the following procedure to satisfy specification of end play for mainshaft rear bearing.

    End play: 0 - 0.06 mm (0 - 0.0024 in)

    Dimension "P" = (P1 – P2) + End play

    P: Thickness of adjusting shim

    P1: Distance between transaxle case end face and mainshaft rear bearing

    P2: Distance between adjusting shim end face of rear cover and transaxle mounting face

    Mainshaft rear bearing adjusting shims:

    Refer to SDS, MT-94.

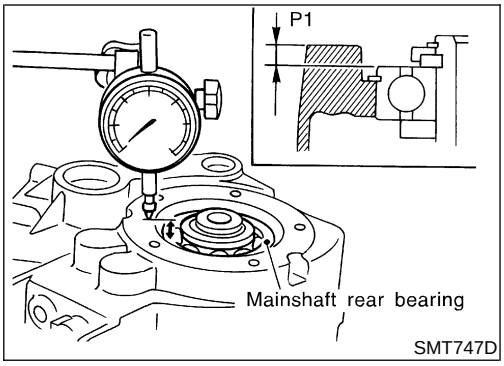

a. Using dial gauge as shown in the figure, measure dimension "P1" between transaxle case end face and mainshaft rear bearing.

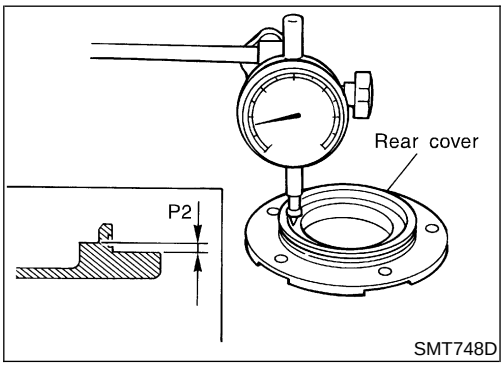

b. Using dial gauge as shown in the figure, measure dimension "P2" between adjusting shim mounting face of rear cover and transaxle mounting face.

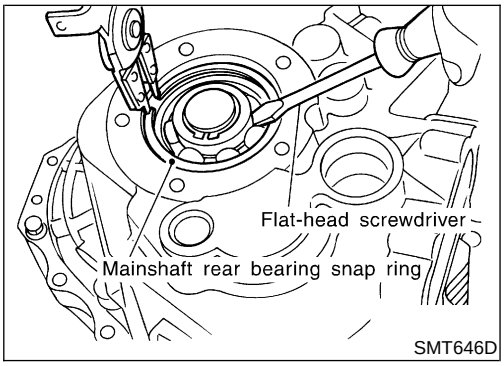

16. Using snap ring pliers as shown in the figure, install snap ring.

CAUTION:

Do not reuse snap ring.

17. Install selected mainshaft adjusting shim.

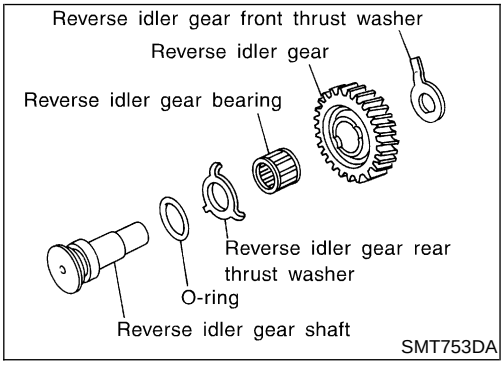

18. Install reverse idler gear, O-ring, thrust washers (front, rear), and bearing onto reverse idler shaft.
19. Install snap ring into transaxle case using snap ring pliers.

CAUTION:

- **Do not reuse snap ring.**
- **Do not reuse O-ring.**
- **Before installation, apply gear oil to O-ring.**

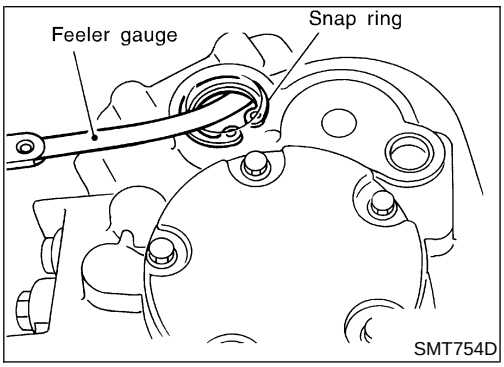

20. Using feeler gauge, measure the end play of snap ring, and select a snap ring suitable to satisfy the following specification.

End play:

0.05 - 0.25 mm (0.0020 - 0.0098 in)

Available snap ring:

Refer to SDS, MT-91.

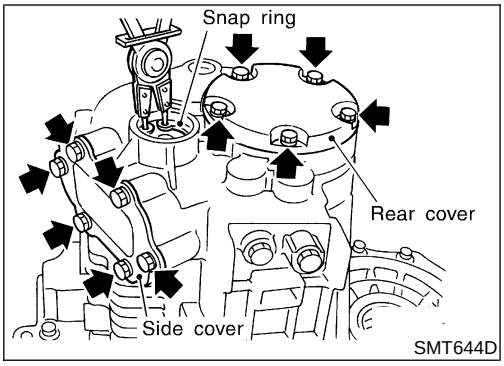

21. Install selected snap ring.

CAUTION:

Do not reuse snap ring.

22. Apply gear oil to rear cover O-ring, and install rear cover, side cover gasket, and side cover. Then tighten mounting bolts with specified torque.

    Tightening torque:

    Refer to MT-25.

CAUTION:

Do not reuse mounting bolts for rear cover and side cover.

Case Components

NLMT0009S02

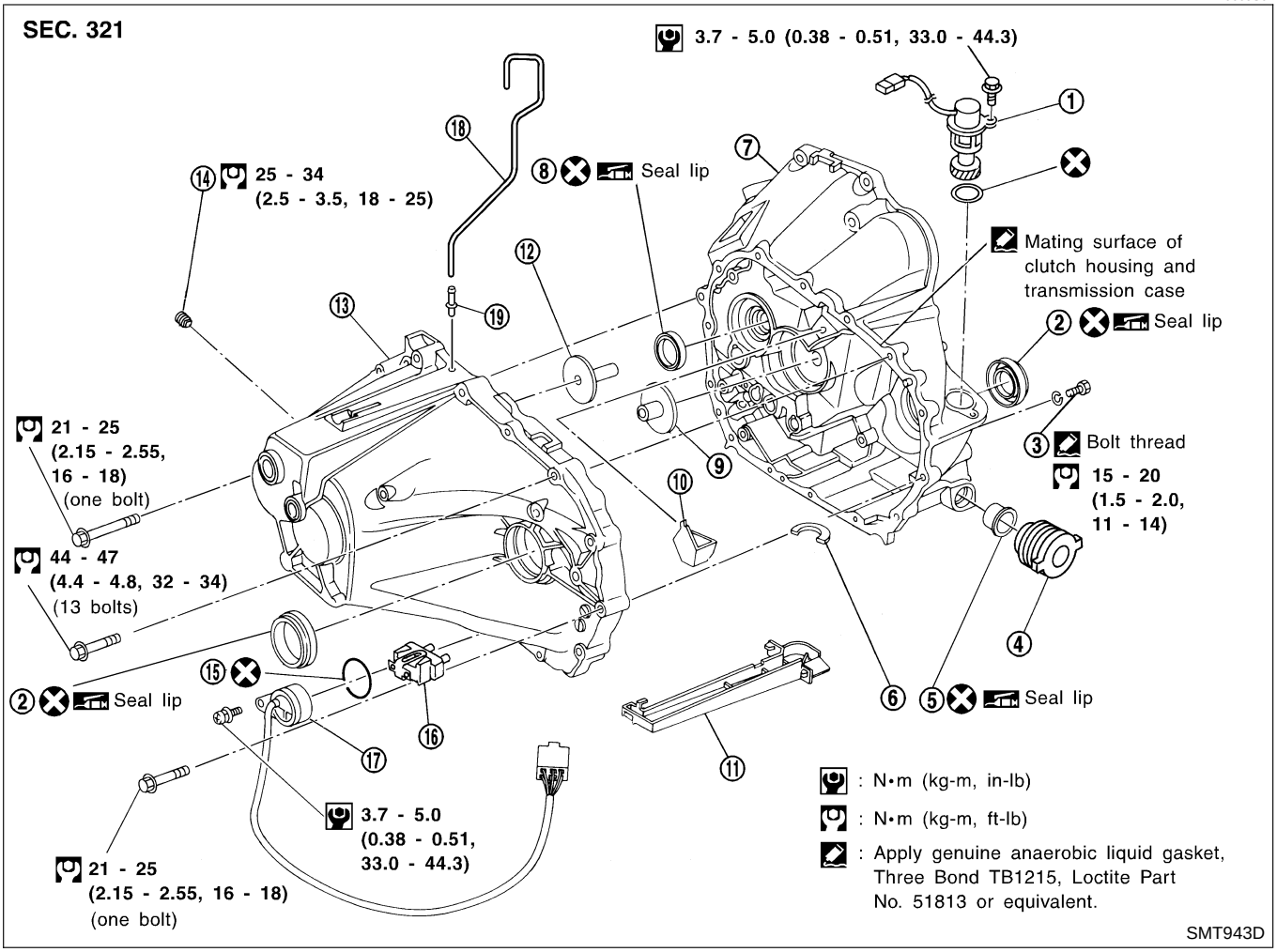

1. Speedometer pinion
2. Differential oil seal
3. Drain plug
4. Boot
5. Striking rod oil seal
6. Magnet
7. Clutch housing
8. Input shaft oil seal
9. Oil channel (Mainshaft)
10. Oil pocket
11. Oil gutter
12. Oil channel (Input shaft)
13. Transmission case
14. Filler plug
15. O-ring
16. Movable plate assembly
17. PNP switch (where fitted)
18. Breather hose
19. Breather pipe

Gear Components

NLMT0009S03

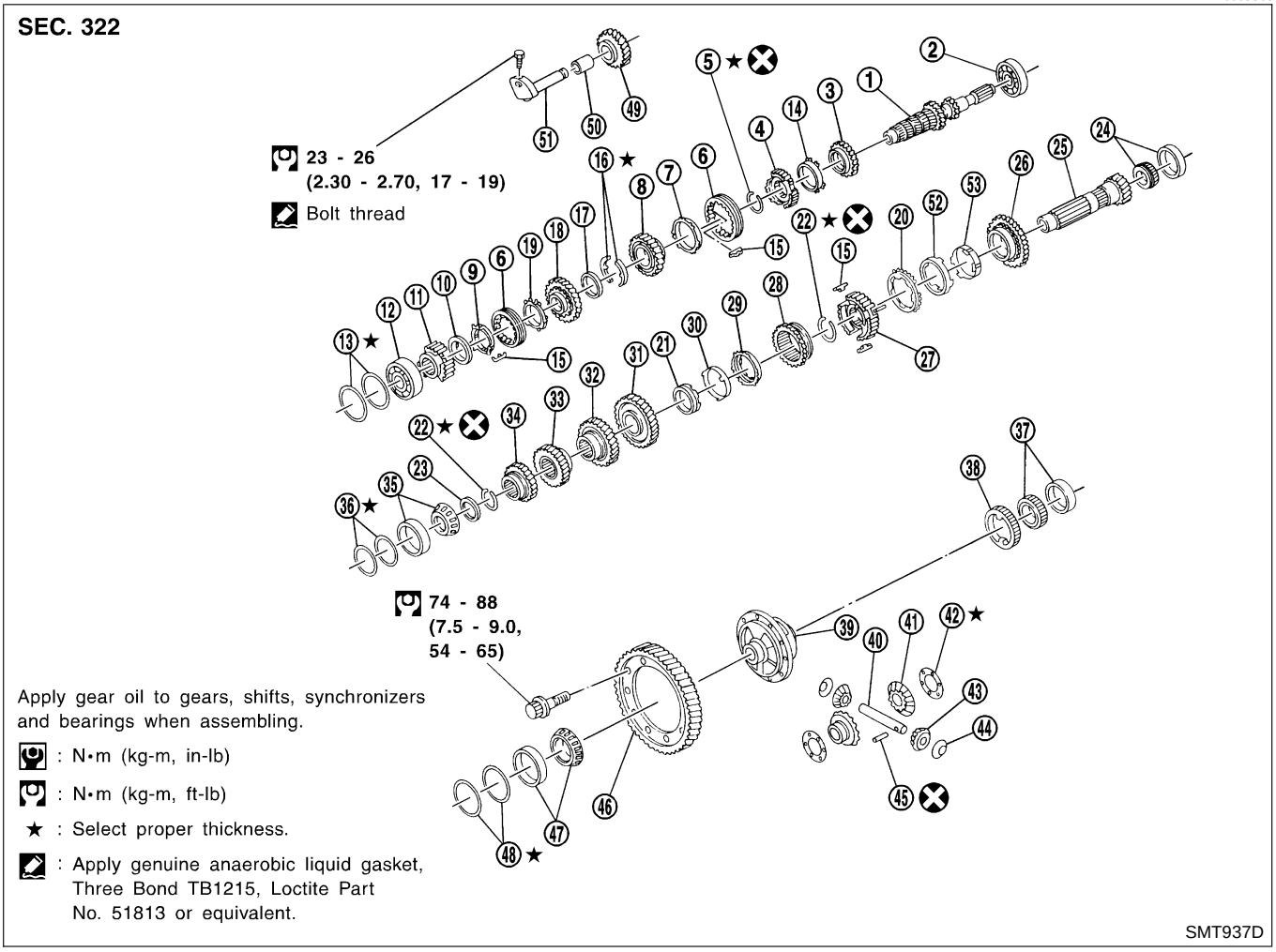

1. Input shaft
2. Input shaft front bearing
3. 3rd input gear
4. 3rd & 4th synchronizer hub
5. Snap ring
6. Coupling sleeve
7. 4th baulk ring
8. 4th input gear
9. Reverse baulk ring
10. Reverse synchronizer cone
11. 5th synchronizer hub
12. Input shaft rear bearing
13. Input shaft bearing adjusting shim
14. 3rd baulk ring
15. Insert spring
16. 4th input gear thrust washer
17. Thrust washer ring
18. 5th input gear
19. 5th baulk ring
20. 1st outer baulk ring
21. 2nd inner baulk ring
22. Snap ring
23. Mainshaft bearing spacer
24. Mainshaft front bearing
25. Mainshaft
26. 1st main gear
27. 1st & 2nd synchronizer hub
28. Reverse main gear & 1st-2nd coupling sleeve
29. 2nd outer baulk ring
30. 2nd gear synchronizer cone
31. 2nd main gear
32. 3rd main gear
33. 4th main gear
34. 5th main gear
35. Mainshaft rear bearing
36. Mainshaft bearing adjusting shim
37. Differential side bearing
38. Speedometer drive gear
39. Differential case
40. Pinion mate shaft
41. Side gear
42. Side gear thrust washer
43. Pinion mate gear
44. Pinion mate gear thrust washer
45. Retaining pin
46. Final gear
47. Differential side bearing
48. Differential side bearing adjusting shim
49. Reverse idler gear
50. Bushing
51. Reverse idler shaft
52. 1st gear synchronizer cone
53. 1st inner baulk ring

Shift Control Components

NLMT0009S04

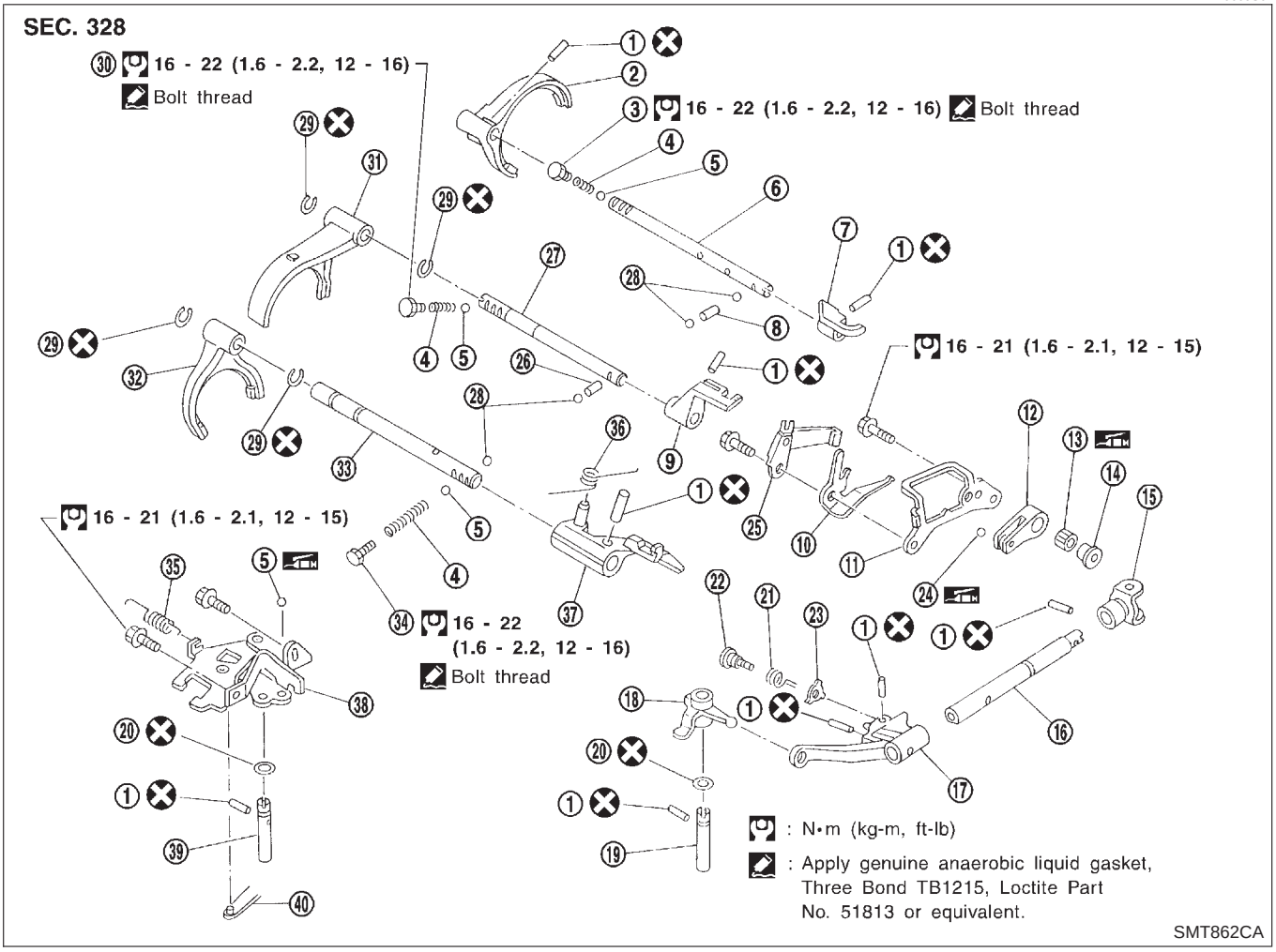

1. Retaining pin
2. 1st & 2nd shift fork
3. 1st & 2nd check plug
4. Return spring
5. Check ball
6. 1st & 2nd fork rod
7. 1st & 2nd bracket
8. Interlock plunger
9. 3rd & 4th bracket
10. Return spring
11. Reverse gate
12. Select arm
13. Return bearing
14. Bushing
15. Yoke
16. Striking rod
17. Striking lever
18. Selector
19. Selector shaft
20. O-ring
21. Return spring
22. Cam pin
23. Reverse check cam
24. Check ball
25. Select check spring
26. Interlock plunger
27. 3rd & 4th fork rod
28. Interlock ball
29. Stopper ring
30. 3rd & 4th check plug
31. 3rd & 4th shift fork
32. 5th shift fork
33. 5th fork rod
34. 5th & reverse check plug
35. Reverse lever spring
36. Reverse lock spring
37. 5th & reverse bracket
38. Reverse lever assembly
39. Reverse arm shaft
40. Control lever spring

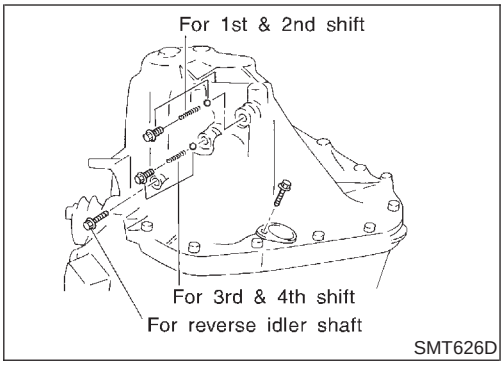

1. Before removing transmission case, remove bolts, check plugs, springs and check balls as shown left.
- **Be careful not to lose check balls.**
2. Remove transmission case.

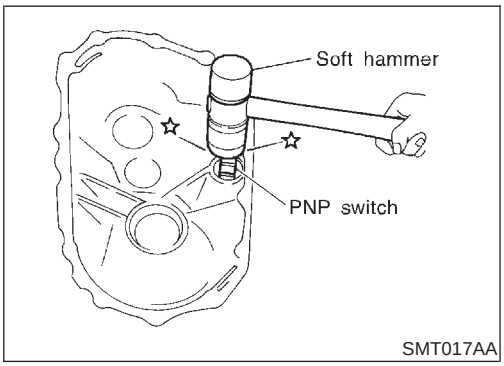

3. Remove PNP switch.

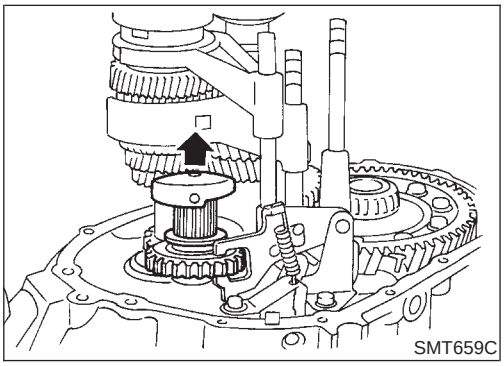

4. Mesh 4th gear, and then remove reverse idler shaft and reverse idler gear.

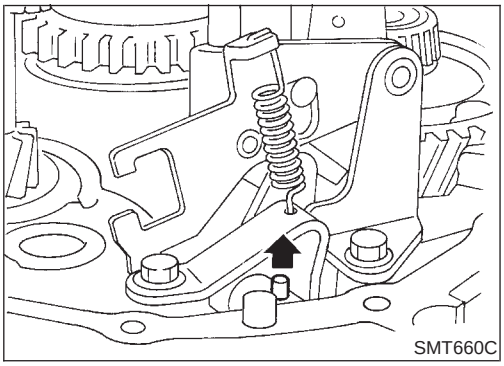

5. Pull out retaining pin.

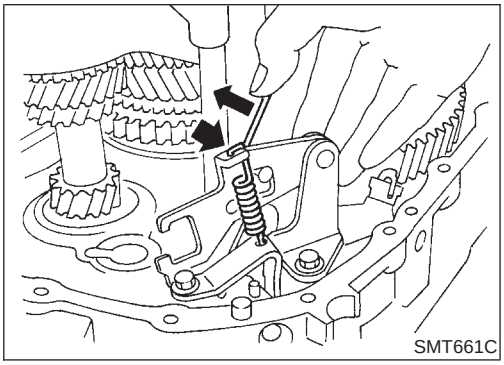

6. Remove reverse lever spring and reverse lock spring from reverse lever assembly.

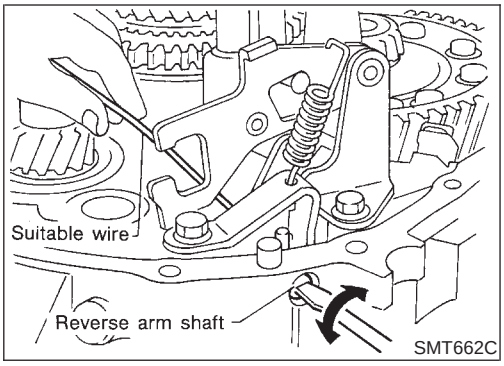

7. Remove reverse arm shaft while rotating it.

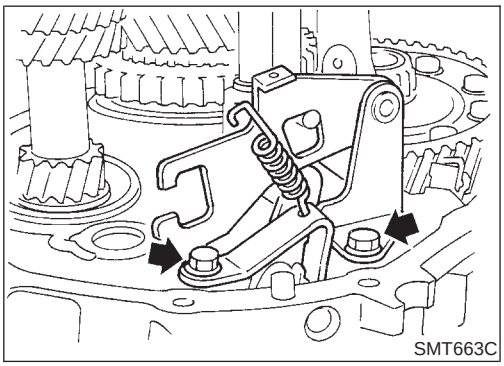

8. Remove reverse lever assembly and check ball.
- **Be careful not to lose check ball.**

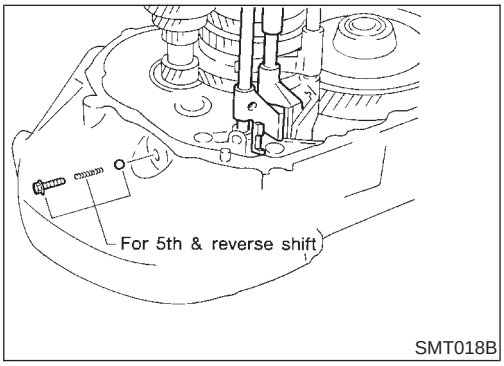

9. Remove 5th & reverse check plug, spring and ball.
- **Be careful not to lose check ball.**

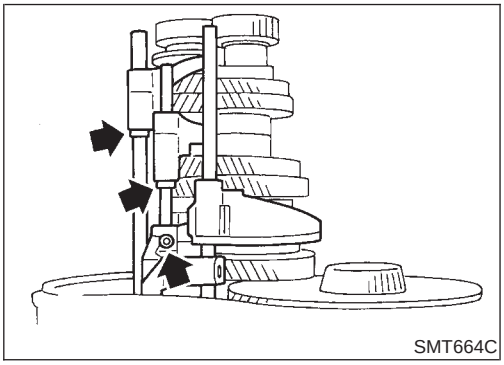

10. Remove stopper rings and retaining pins from 5th and 3rd & 4th fork rods.
    When removing stopper rings. Use snap ring remover and installer.
11. Remove 5th and 3rd & 4th fork rods. Then remove forks and brackets.

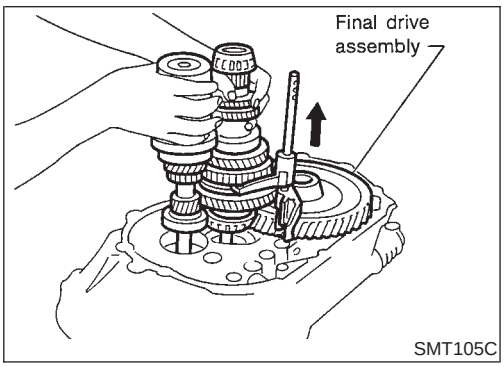

12. Remove both input and mainshafts with 1st & 2nd fork and fork rod as a set.
13. Remove final drive assembly.
- **Always withdraw mainshaft straight out. Failure to do so can damage resin oil channel on clutch housing side.**

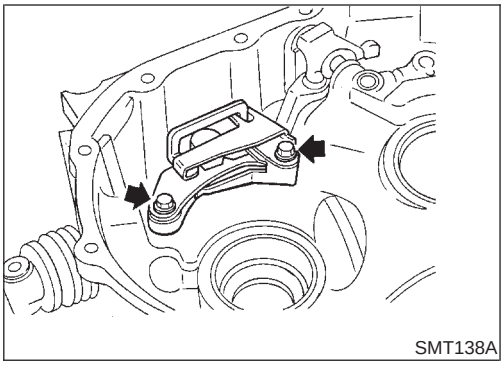
SMT138A

14. Remove reverse check assembly and check ball.
- **Be careful not to lose check ball.**

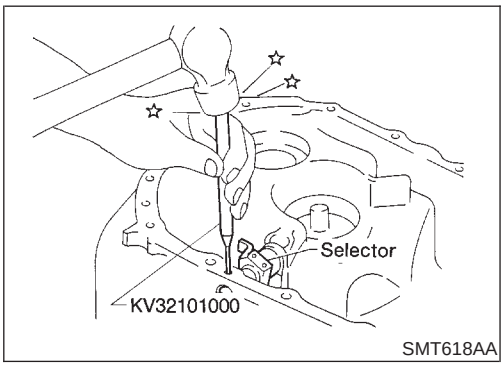

SMT618AA

15. Remove retaining pin and detach the selector.

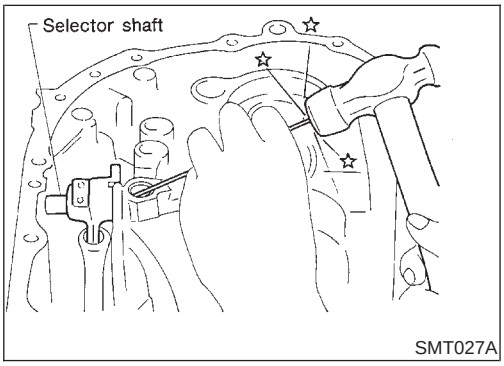

SMT027A

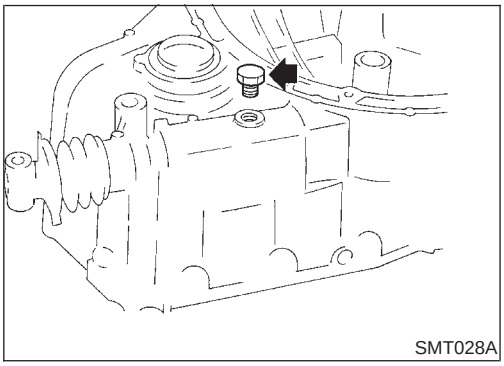
SMT028A

16. Remove drain plug for convenience in removing retaining pin which holds striking lever to striking rod.

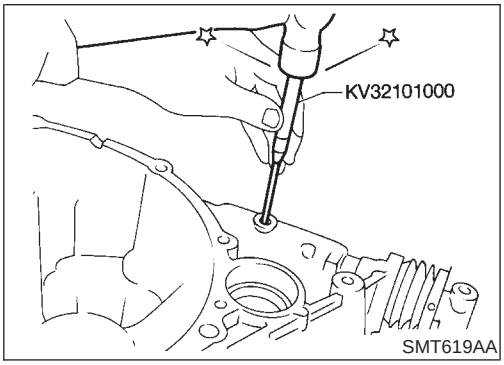

SMT619AA

17. Remove retaining pin and then withdraw striking lever and striking rod.

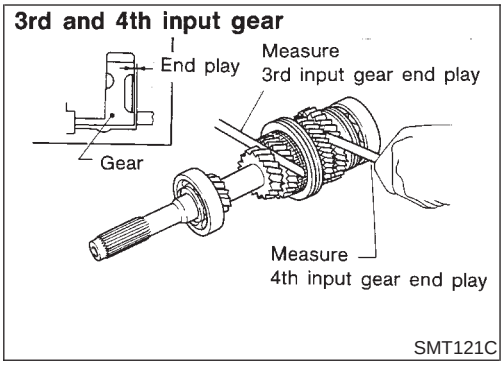

Input Shaft and Gears

DISASSEMBLY

NLMT0011

1. Before disassembly, check 3rd, 4th and 5th input gear end plays.

   Gear end play:

   Refer to SDS, MT-98.

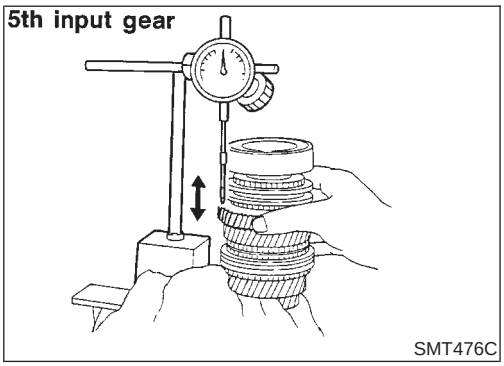

- If not within specification, disassemble and check contact surface of gear, shaft and hub. Check clearance of snap ring groove. Refer to “ASSEMBLY”, MT-71.

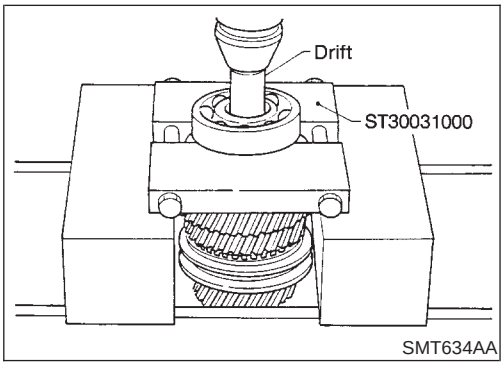

2. Remove input shaft rear bearing.

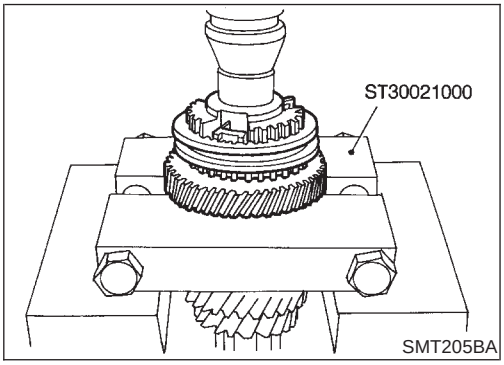

3. Remove 5th & reverse synchronizer and 5th input gear.

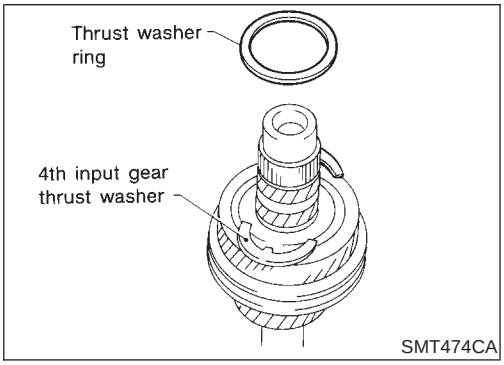

4. Remove thrust washer ring, 4th input gear thrust washers and 4th input gear.

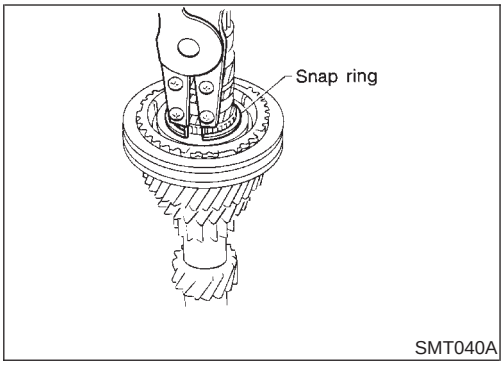

SMT040A

5. Remove snap ring.

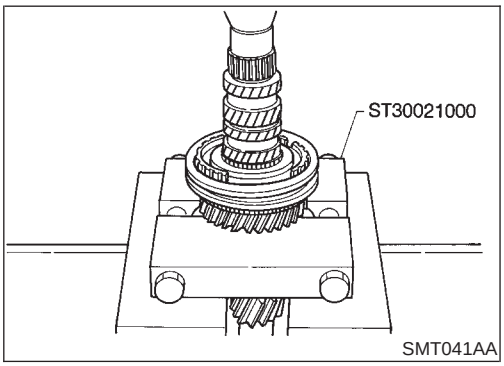

SMT041AA

6. Remove 3rd & 4th synchronizer and 3rd input gear.

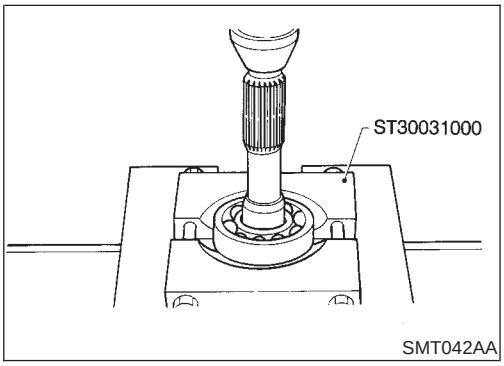

SMT042AA

7. Remove input shaft front bearing.

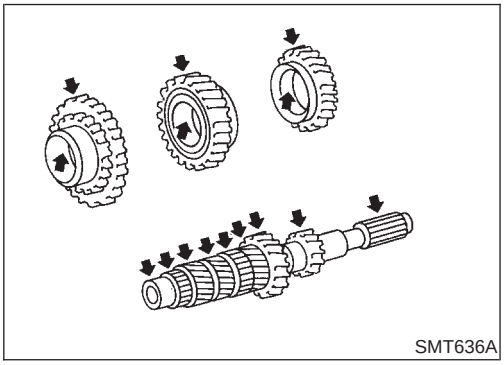
SMT636A

INSPECTION

NLMT0012

Input shaft and Gears

NLMT0012S01

- Check input shaft for cracks, wear or bending.
- Check gears for excessive wear, chips or cracks.

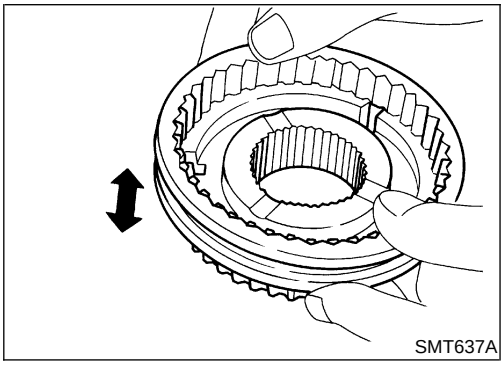
SMT637A

Synchronizer

NLMT0012S02

- Check spline portion of coupling sleeves, hubs and gears for wear or cracks.
- Check baulk rings for cracks or deformation.
- Check insert springs for wear or deformation.

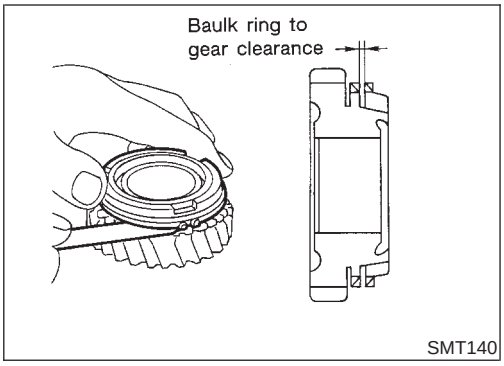

- Measure clearance between baulk ring and gear (3rd, 4th and 5th).

  Clearance between baulk ring and gear:

  Standard

  1.0 - 1.35 mm (0.0394 - 0.0531 in)

  Wear limit

  0.7 mm (0.028 in)

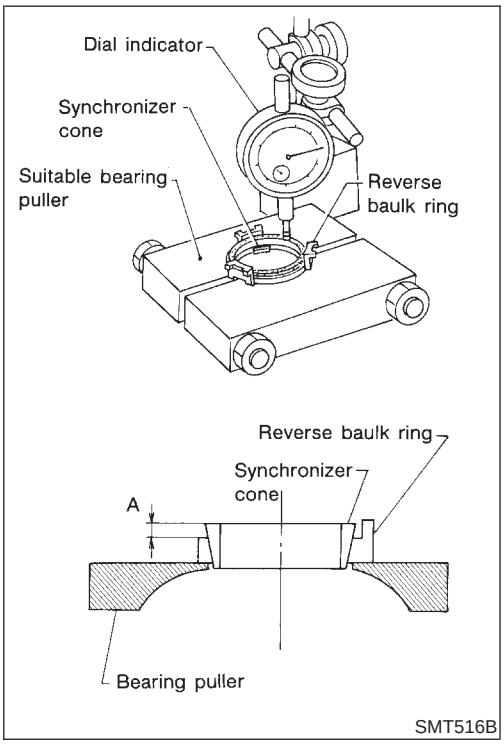

- **Measure wear of reverse baulk ring.**

1. Place reverse baulk ring on disc and then place reverse synchronizer cone on reverse baulk ring.
- **Make sure projection of synchronizer cone is positioned over the recess on Tool.**
2. While holding reverse synchronizer cone against reverse baulk ring as firmly as possible, measure dimension "A" with dial indicator.

   Wear limit:

   Dimension "A" 1.2 mm (0.047 in)
3. If dimension "A" is smaller than the wear limit, replace baulk ring.

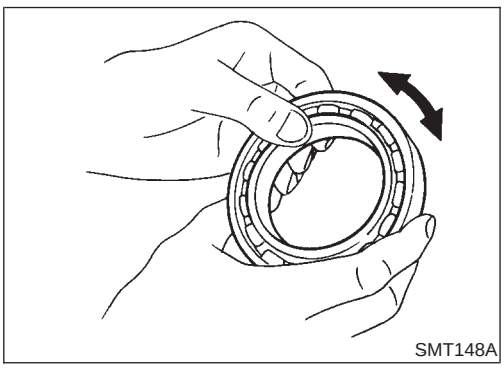

Bearing

NLMT0012S03

- Make sure bearings roll freely and are free from noise, cracks, pitting or wear.

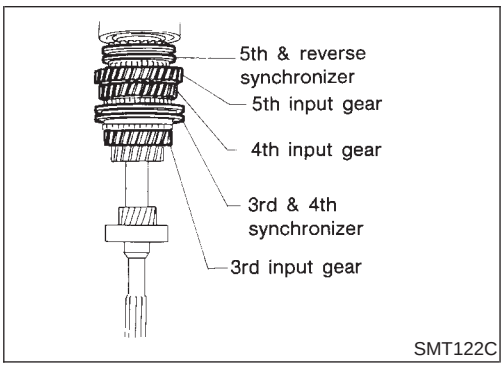

ASSEMBLY

NLMT0013

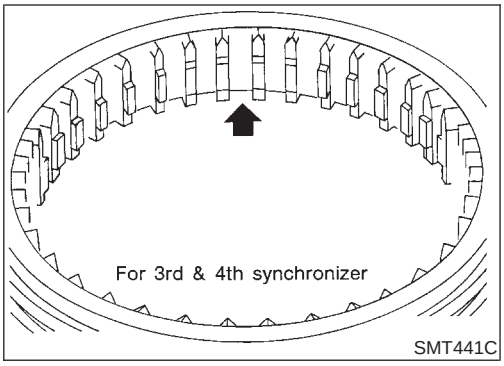

1. Place inserts in three grooves on coupling sleeve (3rd & 4th synchronizer).

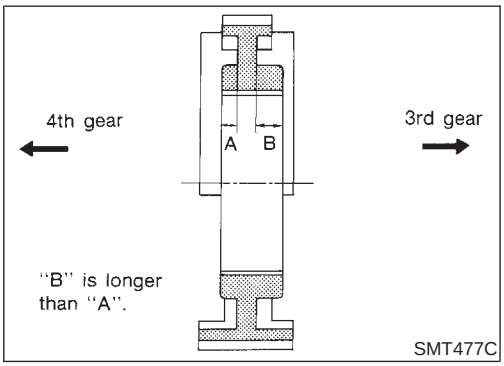

2. Install 3rd input gear and 3rd baulk ring.
3. Press on 3rd & 4th synchronizer hub.

- **Pay attention to its direction.**

4. Select proper snap ring of 3rd & 4th synchronizer hub to minimize clearance of groove, and then install it.

Allowable clearance of groove:
0 - 0.1 mm (0 - 0.004 in)
Snap ring of 3rd & 4th synchronizer hub:
Refer to SDS, MT-99.

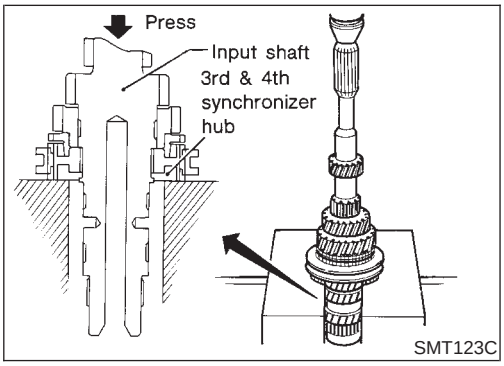

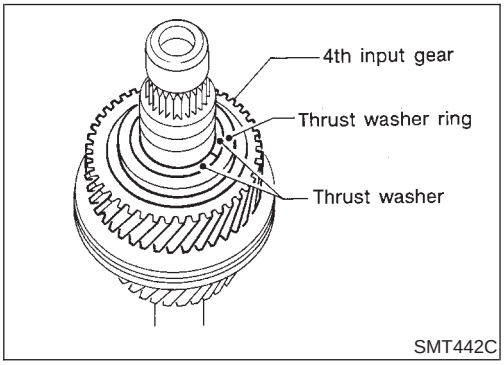

5. Install 4th input gear.
6. Select proper thrust washers to minimize clearance of groove. Then install them and thrust washer ring.

Allowable clearance of groove:
0 - 0.06 mm (0 - 0.0024 in)
4th input gear thrust washer:
Refer to SDS, MT-99.

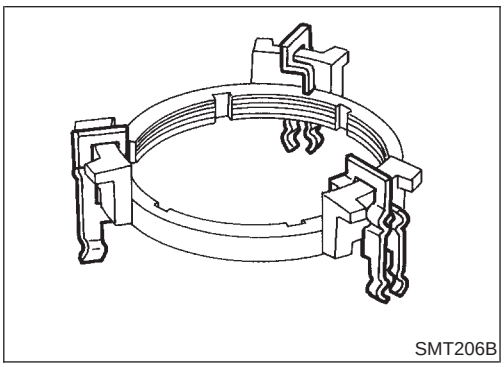

7. Install 5th & reverse synchronizer assembly.

a. Hook insert springs on reverse baulk ring.

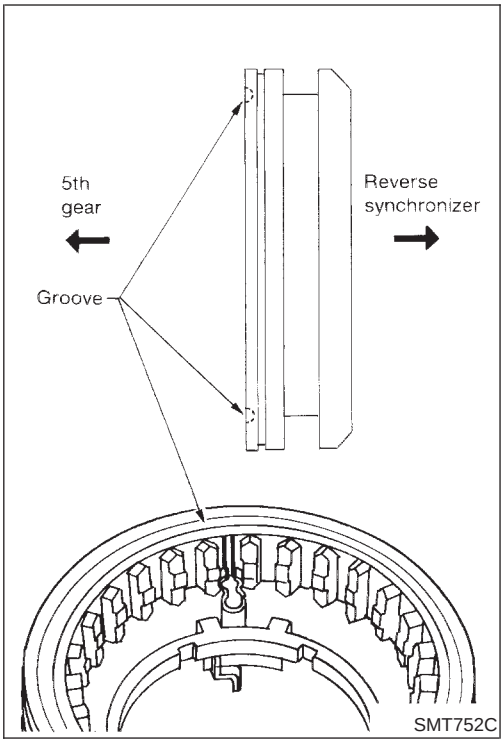

b. Install insert springs with reverse baulk ring onto coupling sleeve.

- **Pay attention to position of insert springs.**

c. Place 5th baulk ring on 5th input gear.

d. Install reverse synchronizer cone on reverse baulk ring.

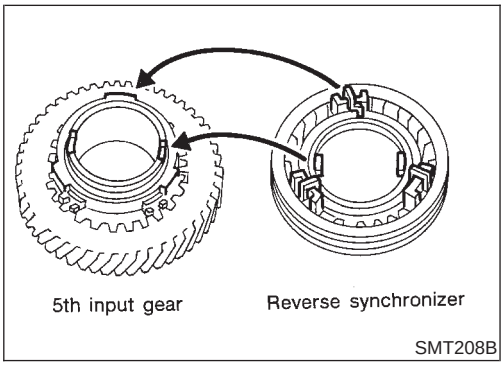

e. Place reverse synchronizer assembly on 5th input gear.

- **Mesh recesses of 5th input gear with projections of reverse synchronizer cone.**
- **Put insert spring mounts on reverse baulk ring upon those on 5th baulk ring.**

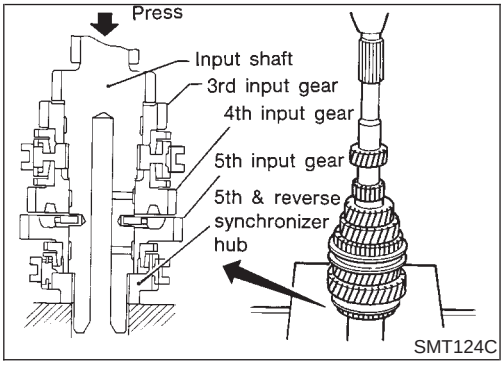

f. Press on 5th & reverse synchronizer assembly with 5th input gear.

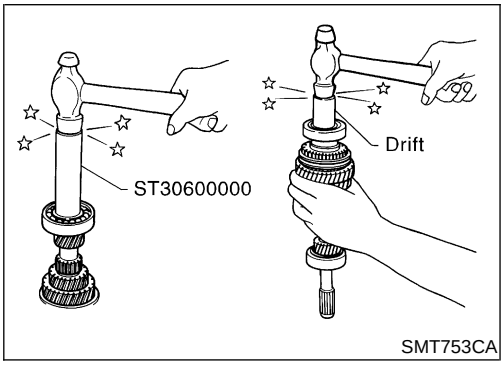

8. Install input shaft front and rear bearings.
9. Measure gear end play as a final check. Refer to "DISASSEMBLY", MT-69.

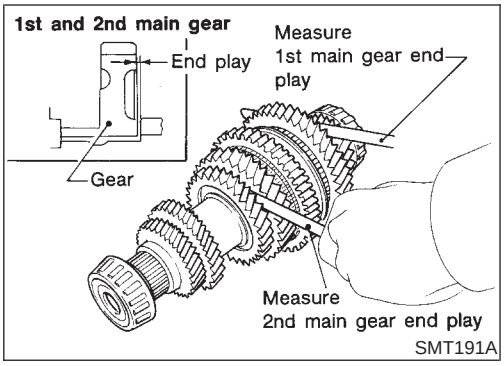

Mainshaft and Gears

DISASSEMBLY

NLMT0014

1. Before disassembly, check 1st and 2nd main gear end plays.

   Gear end play:

   Refer to SDS, MT-98.

   If not within specification, disassemble and check contact surface of gear, shaft and hub. Check clearance of snap ring groove. Refer to “ASSEMBLY”, MT-76.

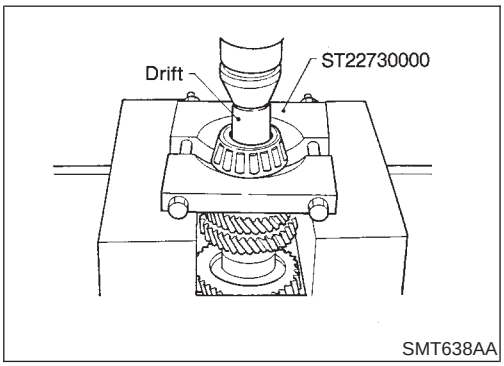

2. Press out mainshaft rear bearing.

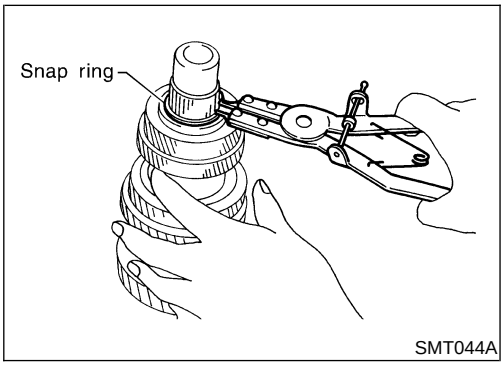

3. Remove thrust washer and snap ring.

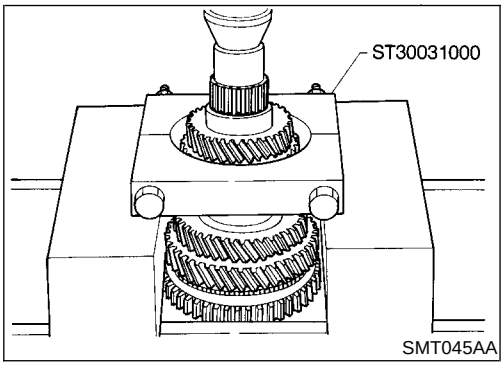

4. Press out 5th main gear and 4th main gear.

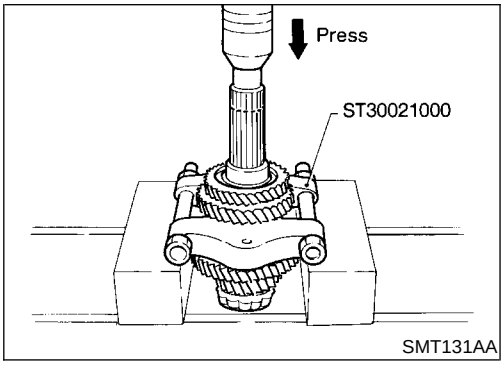

5. Press out 3rd main gear and 2nd main gear.

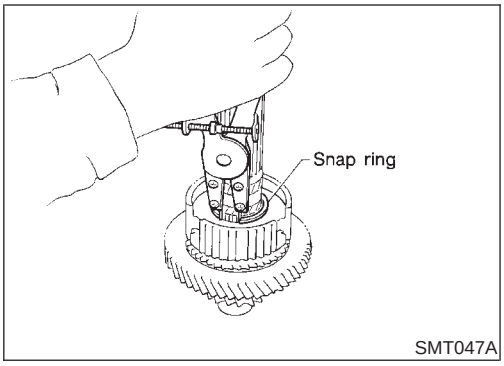

SMT047A

6. Remove snap ring.

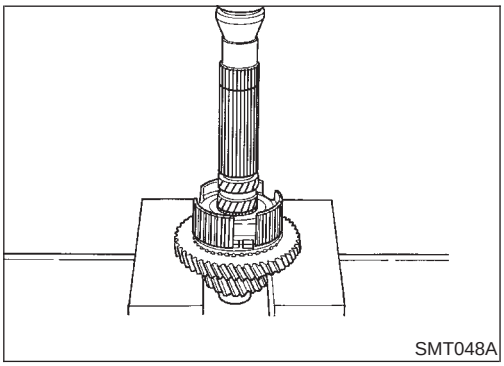
SMT048A

7. Remove 1st & 2nd synchronizer hub and 1st main gear.

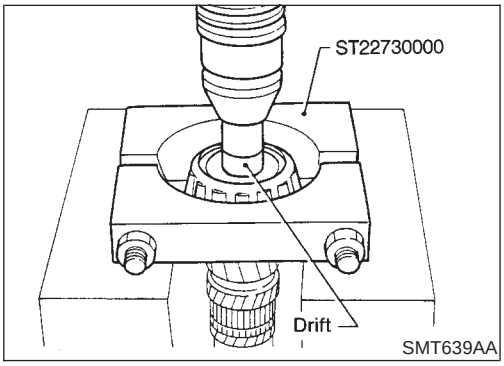

SMT639AA

8. Remove mainshaft front bearing.

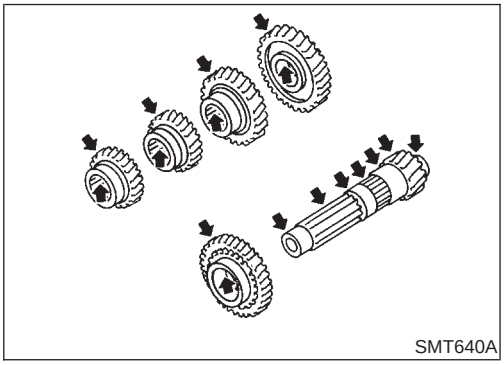
SMT640A

INSPECTION

NLMT0015

Mainshaft and Gears

NLMT0015S01

- Check mainshaft for cracks, wear or bending.
- Check gears for excessive wear, chips or cracks.

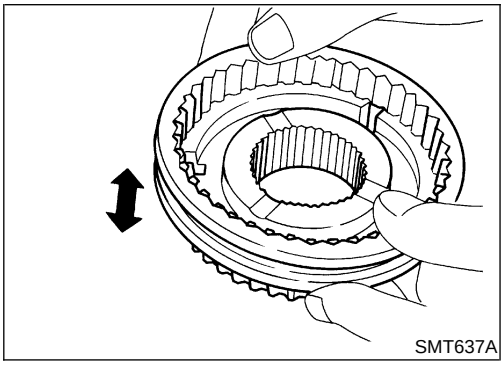
SMT637A

Synchronizer

NLMT0015S02

- Check spline portion of coupling sleeves, hubs and gears for wear or cracks.
- Check baulk rings for cracks or deformation.
- Check insert springs for deformation.

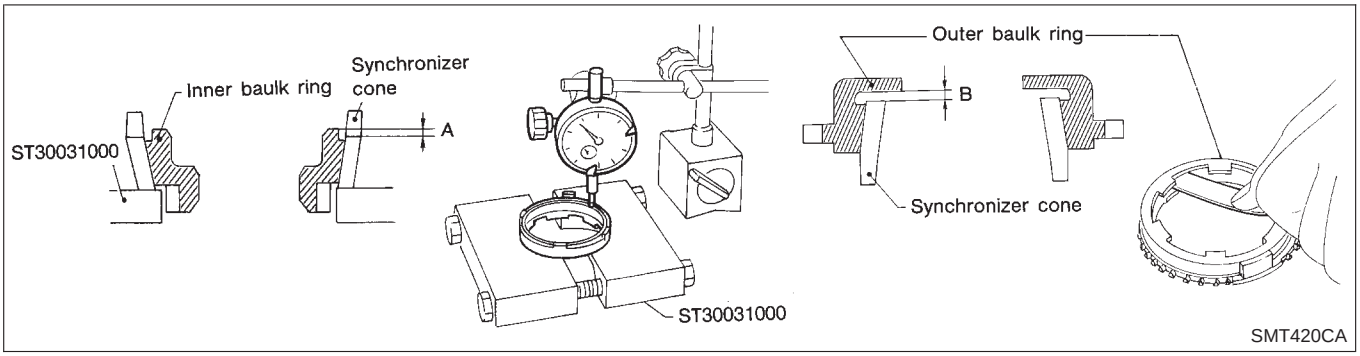

- Measure wear of 1st and 2nd double baulk rings.

a) Place baulk rings in position on synchronizer cone.

b) While holding baulk ring against synchronizer cone as far as it will go, measure dimensions "A" and "B".

Standard:

A 0.6 - 0.8 mm (0.024 - 0.031 in)

B 0.6 - 1.1 mm (0.024 - 0.043 in)

Wear limit:

0.2 mm (0.008 in)

c) If dimension "A" or "B" is smaller than the wear limit, replace outer baulk ring, inner baulk ring and synchronizer cone as a set.

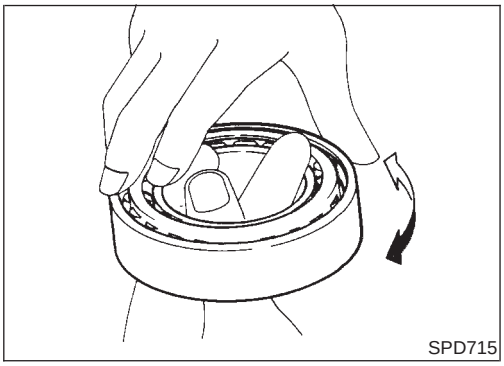

Bearing

NLMT0015S03

- Make sure bearings roll freely and are free from noise, cracks, pitting or wear.
- **When replacing tapered roller bearing, replace outer and inner race as a set.**

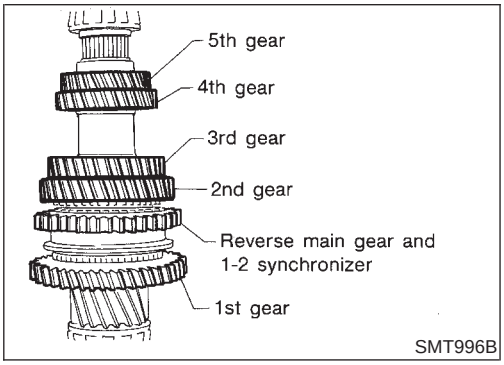

ASSEMBLY

NLMT0016

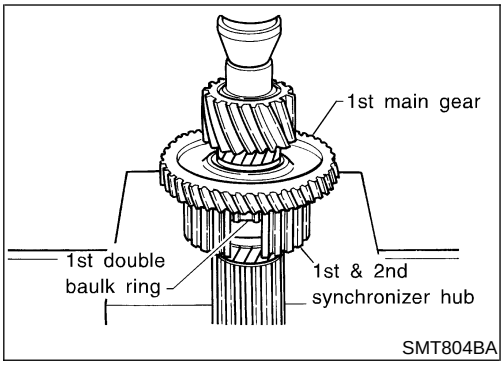

1. Press on 1st main gear, 1st synchronizer cone, inner & outer baulk rings and 1st & 2nd synchronizer hub.
   Refer to the illustration for step 3.

- **Pay attention to direction of 1st & 2nd synchronizer hub.**

2. Select proper snap ring of 1st & 2nd synchronizer hub to minimize clearance of groove and then install it.

   Allowable clearance of groove:
   0 - 0.1 mm (0 - 0.004 in)
   Snap ring of 1st & 2nd synchronizer hub:
   Refer to SDS, MT-99.

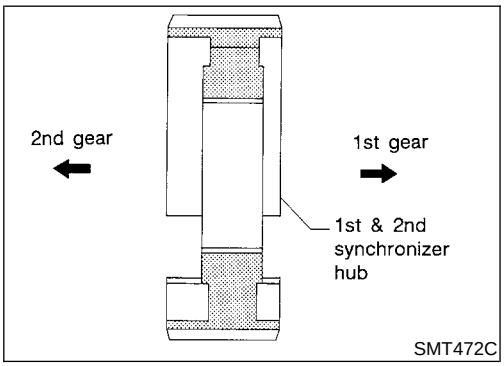

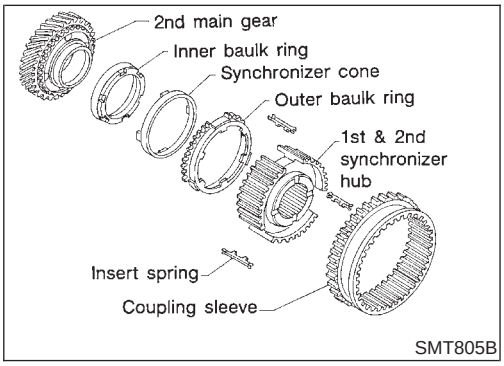

3. Install 2nd synchronizer cone, inner & outer baulk rings. Insert springs and 1st & 2nd coupling sleeve.
4. Install 2nd main gear.

- Ensure four protrusions of 2nd synchronizer cone are set in holes of 2nd main gear.

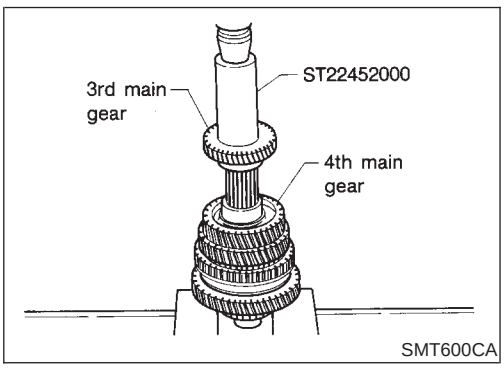

5. Press on 3rd main gear.
6. Press on 4th main gear.

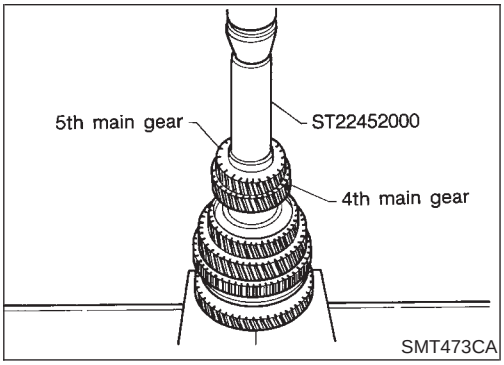

7. Press on 5th main gear.
8. Select proper snap ring of 5th main gear to minimize clearance of groove and then install it.

   Allowable clearance of groove:
   0 - 0.15 mm (0 - 0.0059 in)
   Snap ring of 5th main gear:
   Refer to SDS, MT-99.

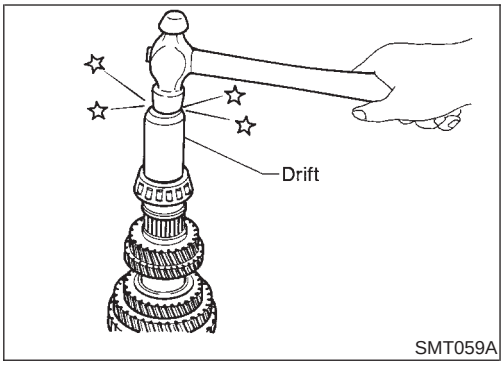

SMT059A

9. Press on thrust washer and press on mainshaft rear bearing.
10. Press on mainshaft front bearing.
11. Measure gear end play as a final check. Refer to "DISASSEMBLY", MT-74.

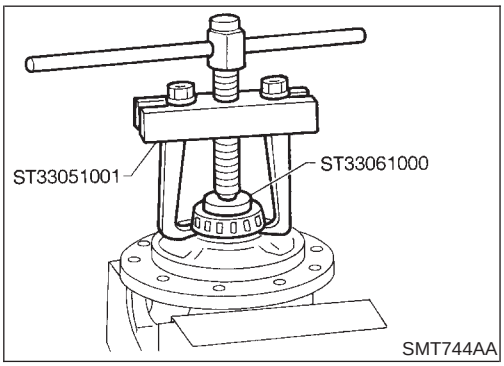

SMT744AA

Final Drive

DISASSEMBLY

NLMT0017

1. Remove final gear.
2. Remove speedometer drive gear by cutting it.
3. Press out differential side bearings.

- **Be careful not to mix up the right and left bearings.**

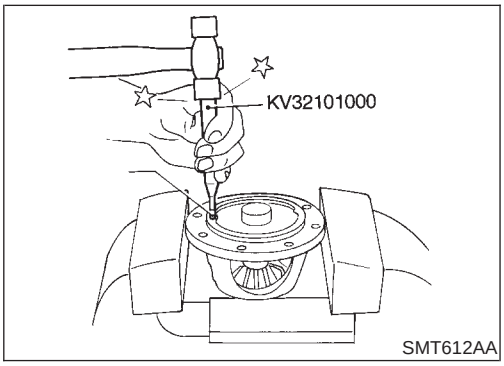

SMT612AA

4. Drive out retaining pin and draw out pinion mate shaft.
5. Remove pinion mate gears and side gears.

INSPECTION

NLMT0018

Gear, Washer, Shaft and Case

NLMT0018S01

- Check mating surfaces of differential case, side gears and pinion mate gears.
- Check washers for wear.

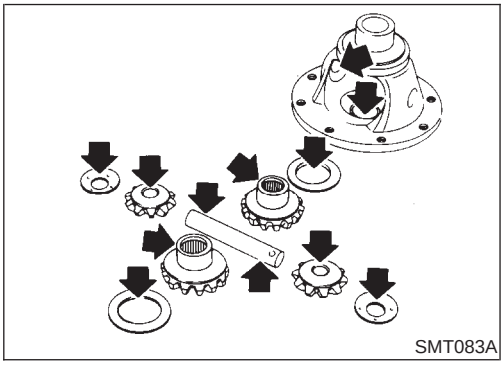
SMT083A

Bearings

NLMT0018S03

- Make sure bearings roll freely and are free from noise, cracks, pitting or wear.
- **When replacing taper roller bearing, replace outer and inner race as a set.**

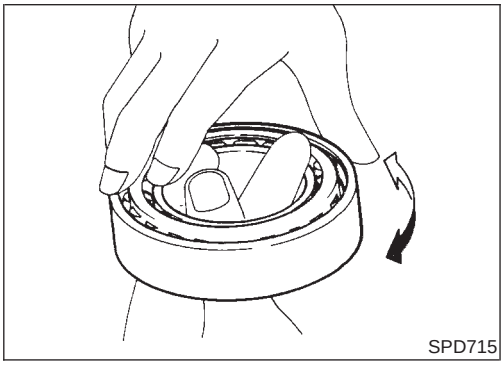
SPD715

ASSEMBLY

NLMT0019

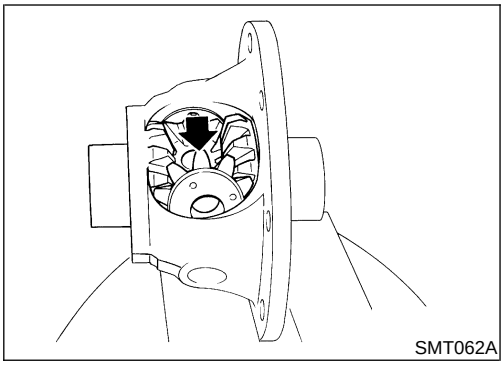
SMT062A

1. Attach side gear thrust washers to side gears, then install pinion mate washers and pinion mate gears in place.

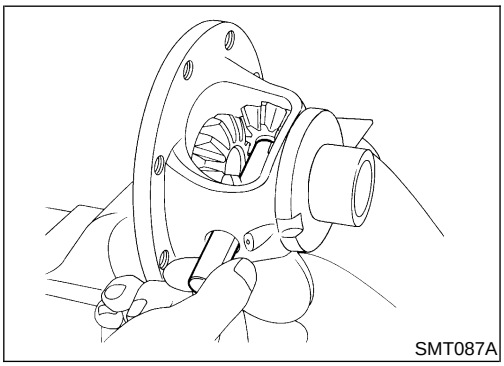
SMT087A

2. Insert pinion mate shaft.
- **When inserting, be careful not to damage pinion mate thrust washers.**

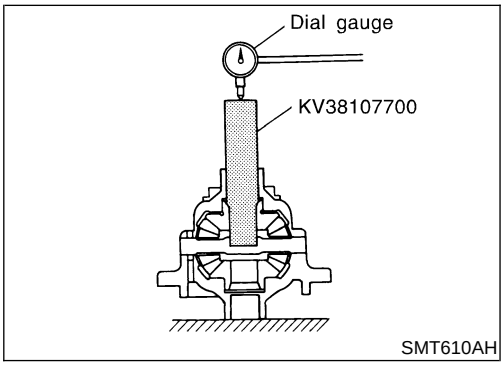

SMT610AH

3. Measure clearance between side gear and differential case with washers following the procedure below:

a. Set Tool and dial indicator on side gear.

b. Move side gear up and down to measure dial indicator deflection. Always measure indicator deflection on both side gears.

Clearance between side gear and differential case with washers:

0.1 - 0.2 mm (0.004 - 0.008 in)

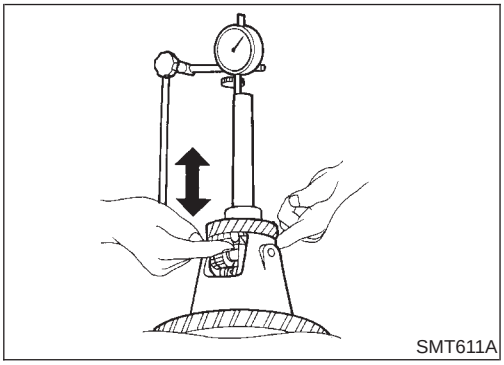
SMT611A

c. If not within specification, adjust clearance by changing thickness of side gear thrust washers.

Differential side gear thrust washer:

Refer to SDS, MT-99.

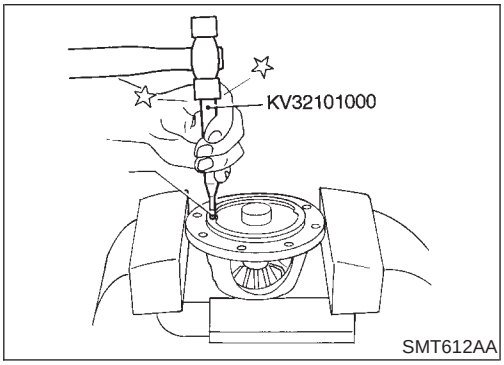

SMT612AA

4. Install retaining pin.
- **Make sure that retaining pin is flush with case.**

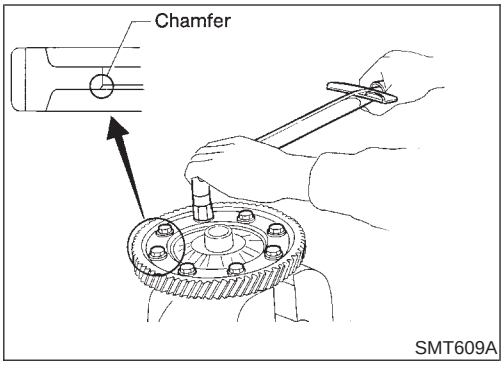

5. Install final gear.
6. Install speedometer drive gear.

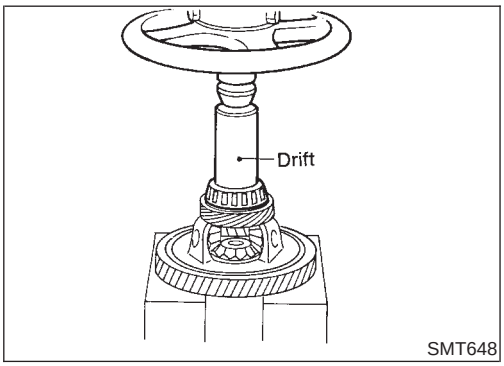

7. Press on differential side bearings.

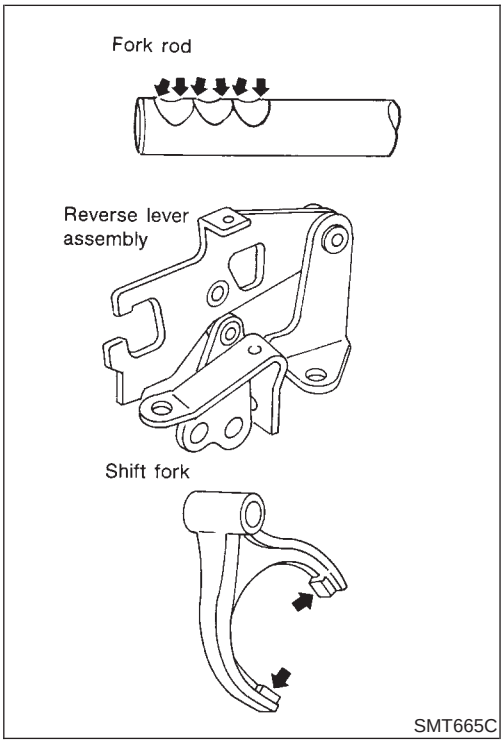

Shift Control Components

INSPECTION

NLMT0020

- Check contact surface and sliding surface for wear, scratches, projections or other damage.

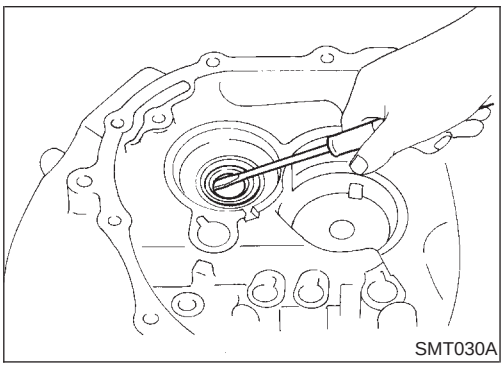

Case Components

REMOVAL AND INSTALLATION

NLMT0021

Input Shaft Oil Seal

NLMT0021S01

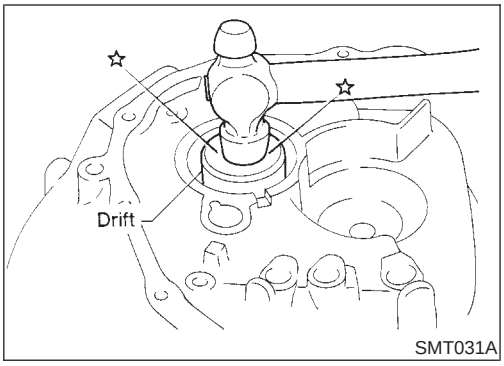

SMT031A

- **Apply multi-purpose grease to seal lip of oil seal before installing.**

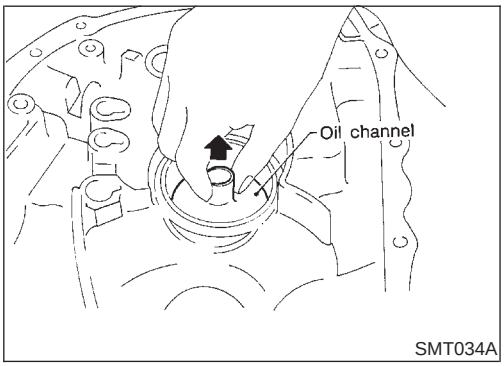

SMT034A

Mainshaft Front Bearing Outer Race

NLMT0021S02

- Extract the oil channel and remove the mainshaft front bearing outer race.

Mainshaft Rear Bearing Outer Race

NLMT0021S03

Refer to "Mainshaft Bearing Preload", MT-100.

Differential Side Bearing Outer Race

NLMT0021S04

Refer to "Input Shaft End Play and Differential Side Bearing Preload", MT-100.

Input Shaft End Play and Differential Side Bearing Preload

NLMT0022S01

If any of the following parts are replaced, adjust input shaft end play.

- **Input shaft**
- **Input shaft bearing**
- **Clutch housing**
- **Transmission case**

If any of the following parts are replaced, adjust differential side bearing preload.

- **Differential case**
- **Differential side bearing**
- **Clutch housing**
- **Transmission case**

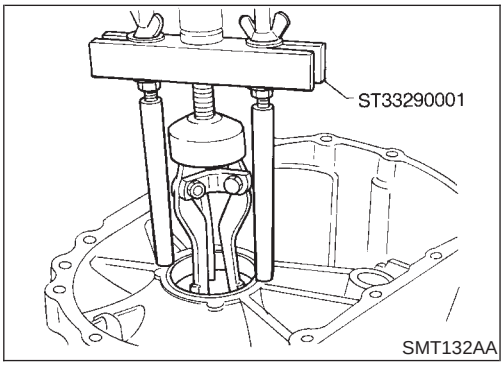

1. Remove differential side bearing outer race (transmission case side) and shim(s).

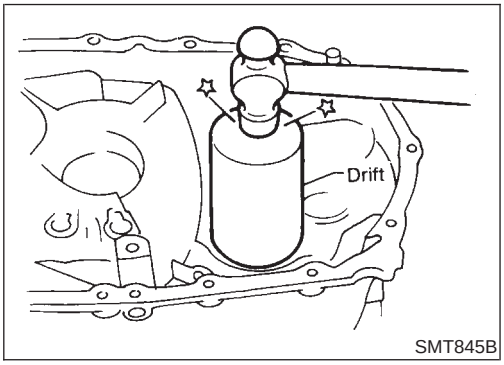

2. Reinstall differential side bearing outer race without shim(s).
3. Install input shaft and final drive assembly on clutch housing.
4. Install transmission case without input shaft bearing shim(s). Then tighten it to the specified torque.
   Refer to “Case Components”, MT-63.

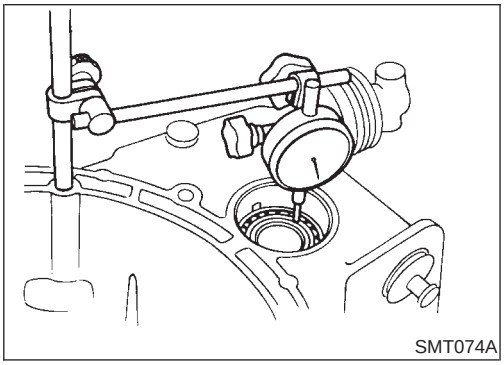

5. Using the following procedures, measure clearance between bearings and transmission case.

DIFFERENTIAL SIDE

NLMT0022S0101

1. Attach dial indicator. If clamp diameter of dial indicator is too small or too large, attach dial indicator using a magnetic stand.

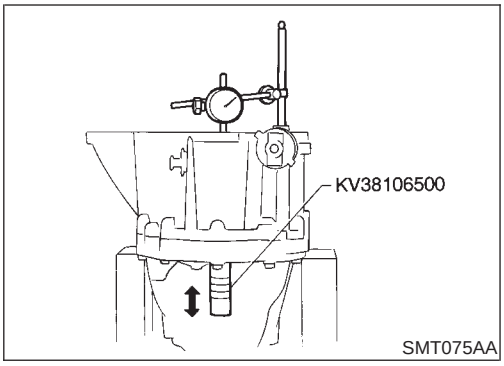

SMT075AA

2. Insert Tool all the way into differential side gear. Move Tool up and down and measure dial indicator deflection.

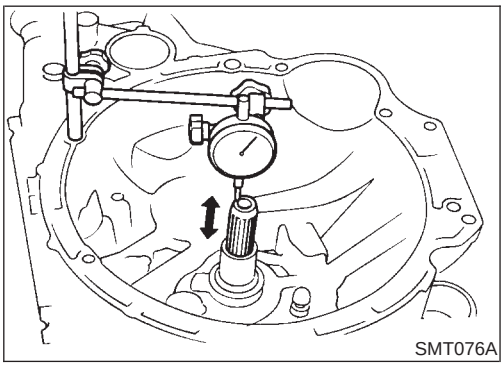
SMT076A

INPUT SHAFT SIDE

NLMT0022S0102

1. Set dial indicator on end of input shaft.
2. Move input shaft up and down and measure dial indicator deflection.
3. Select shims with proper thickness with SDS table as a guide. Refer to SDS, MT-102.
4. Install selected differential side bearing adjusting shim and differential side bearing outer race.

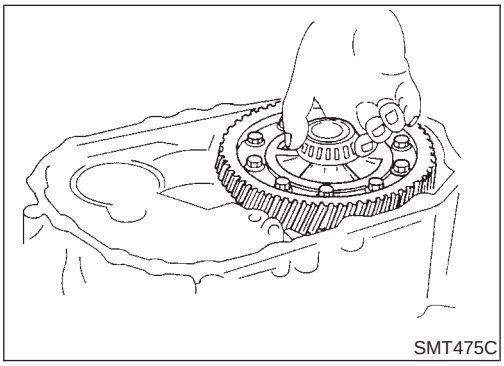
SMT475C

5. Check differential side bearing turning torque.

a. Install final drive assembly on clutch housing.
b. Install transmission case on clutch housing.

- **Tighten transmission case fixing bolts to the specified torque. Refer to "Case Components", MT-63.**

Mainshaft Bearing Preload

NLMT0022S02

If any of the following parts are replaced, adjust mainshaft bearing preload.

- **Mainshaft**
- **Mainshaft bearings**
- **Clutch housing**
- **Transmission case**

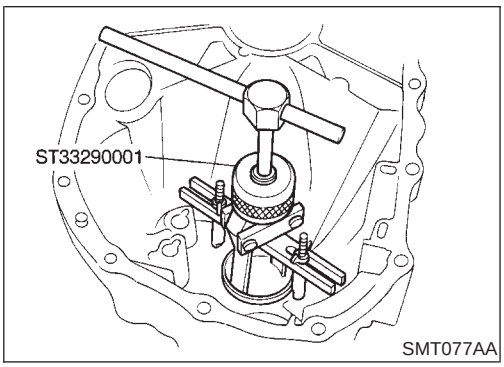

SMT077AA

1. Remove mainshaft rear bearing outer race and shim(s).

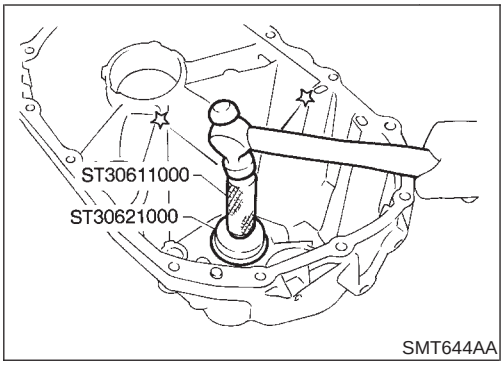

2. Reinstall mainshaft rear bearing outer race without shims.
3. Clean mating surfaces of clutch housing and transmission case with solvent.
4. Install mainshaft and mainshaft front bearing outer race into transmission case. Turn mainshaft while holding bearing outer race so that bearings are properly seated.

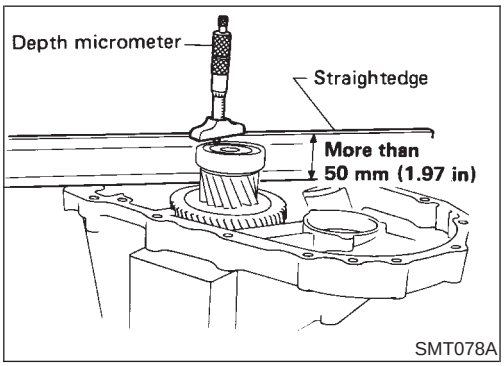

5. Put straightedge [width must be more than 50 mm (1.97 in)] on transmission case, and measure the distance from upper surface of straightedge to surface of the bearing outer race using a depth micrometer.

- **Measure at three places on bearing outer race, and take the average.**

6. Determine dimension A to be used by the following equation.

   Dimension A = Width of straightedge − measured distance

7. Measure the distance from mating surface of clutch housing to portion with which mainshaft front bearing outer race is to be mated.

- **Measure at three places on the portion, and take the average.**

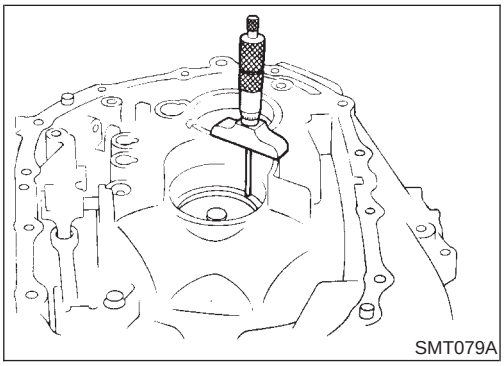

   Dimension B = Measured distance

8. Determine dimension C to be used by the following equation.

   Dimension "C" = B − A

9. Determine total thickness of shims with SDS table as a guide.

   Mainshaft bearing adjusting shim:

   Refer to SDS, MT-100.

10. Install selected mainshaft bearing adjusting shim and mainshaft bearing outer race.
11. Check total turning torque after assembly — Refer to "ASSEMBLY", MT-85.

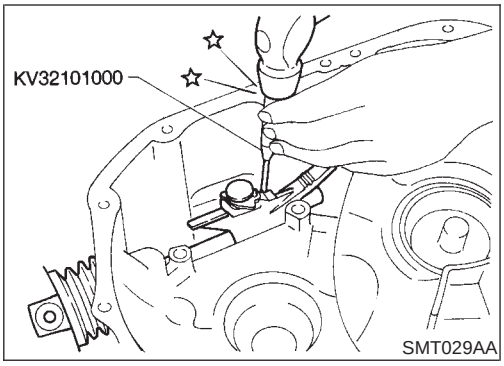

1. Install striking lever and striking rod.

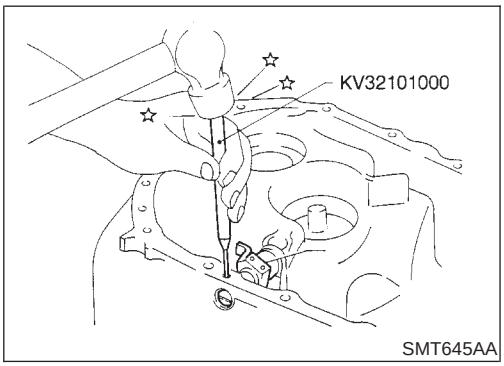

2. Install selector and retaining pin.

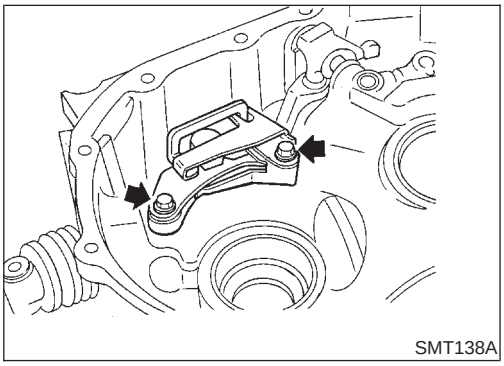

3. Install check ball and reverse check assembly.
- **Before installation, rotate striking rod as shown in the figure to avoid interference.**

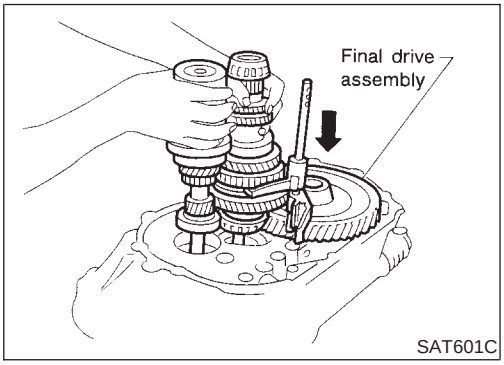

4. Install final drive assembly.
5. Install input shaft and mainshaft with 1st & 2nd shift fork assembly.
- **Be careful not to damage input shaft oil seal.**

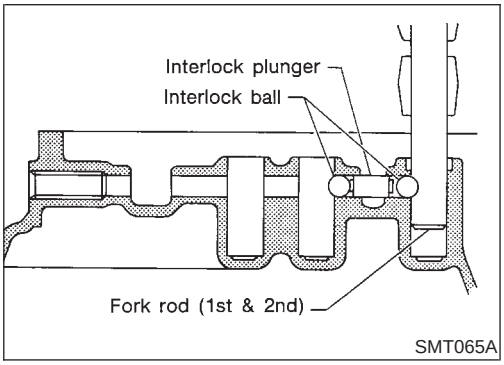

6. Install interlock balls and plunger.

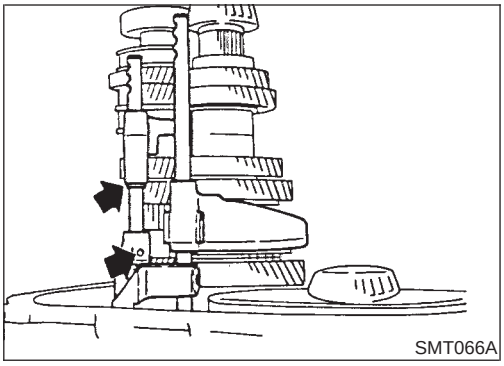
SMT066A

7. Install 3rd & 4th shift fork and bracket, then install 3rd & 4th fork rod, stopper ring and retaining pin.
   When installing stopper rings, use snap ring remover and installer.

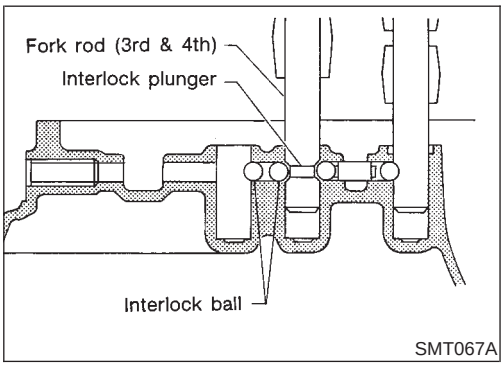

SMT067A

8. Install interlock balls.

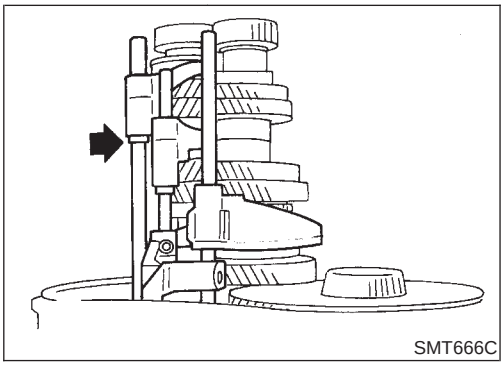
SMT666C

9. Install 5th shift fork, then install fork rod, stopper ring and retaining pin.
   When installing stopper rings, use snap ring remover and installer.

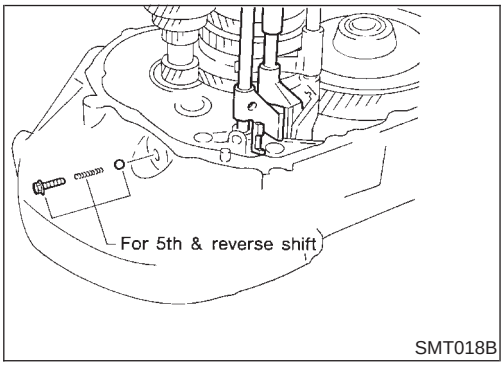

SMT018B

10. Install 5th & reverse check plug, spring and ball.
- Apply sealant to bolt threads. Refer to “Shift Control Components”, MT-65.

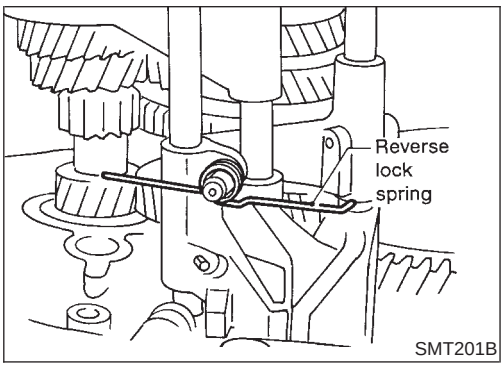

SMT201B

11. Install reverse lock spring on 5th & reverse bracket.
- **Pay attention to its direction.**

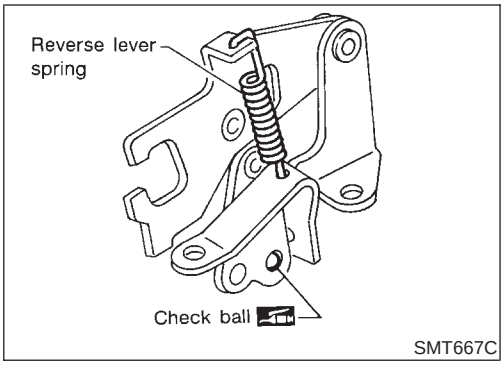

SMT667C

12. Install check ball and reverse lever spring on reverse lever assembly.
- **Apply multi-purpose grease to check ball.**
- **Pay attention to direction of reverse lever spring.**

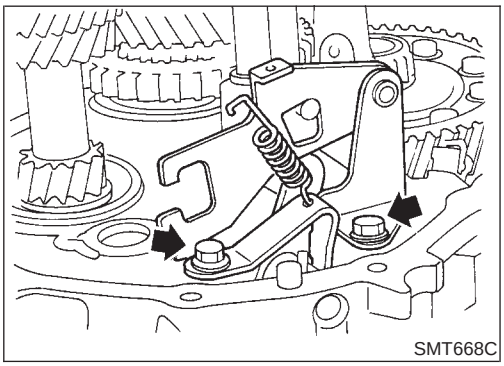
SMT668C

13. Install reverse lever assembly on clutch housing.

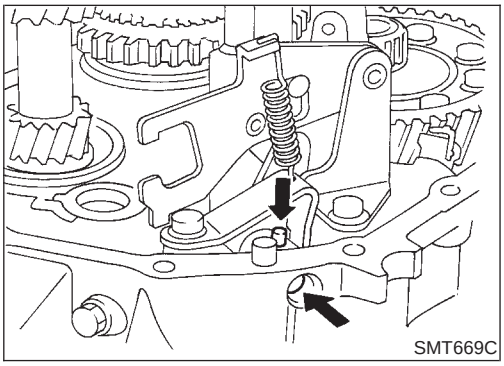
SMT669C

14. Install reverse arm shaft and retaining pin.

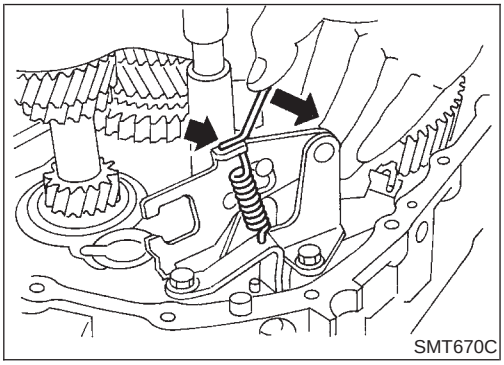
SMT670C

15. Hook reverse lock spring and reverse lever spring on reverse lever assembly.

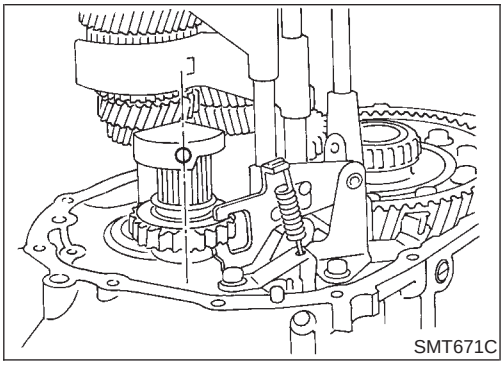
SMT671C

16. Mesh 4th gear, then install reverse idler gear and shaft.
- **Pay attention to direction of tapped hole.**

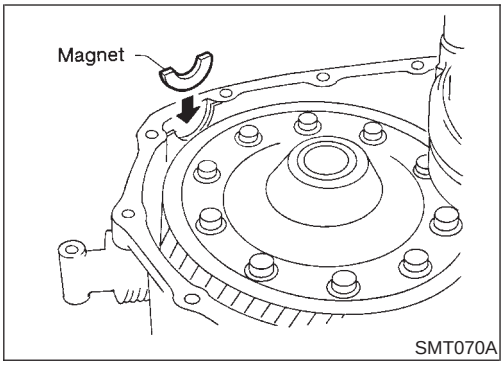

17. Place magnet on clutch housing.

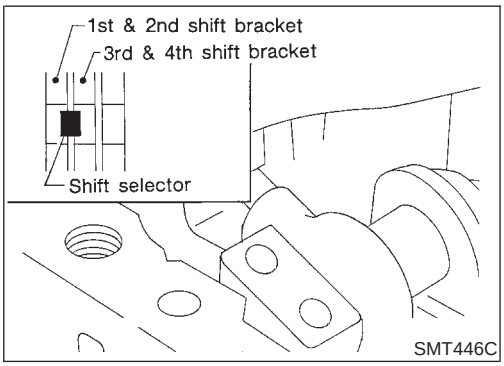

18. If bearing preload of mainshaft was adjusted, install selected shim(s) into transmission case.
- **To aid in installation of transmission case, place shift selector in the 1st and 2nd shift bracket or between 1st and 2nd bracket and 3rd and 4th bracket.**
19. Apply sealant to mating surface of transmission case and install it. Refer to “Case Components”, MT-63.
20. Install PNP switch.

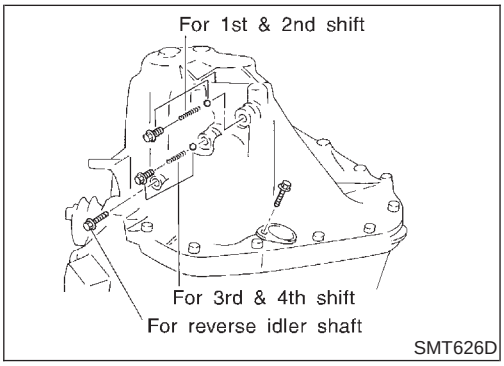

21. Apply sealant to threads of check plugs. Install balls, springs and plugs. Refer to “Shift Control Components”, MT-65.
22. After assembly, check that you can shift into each gear smoothly.

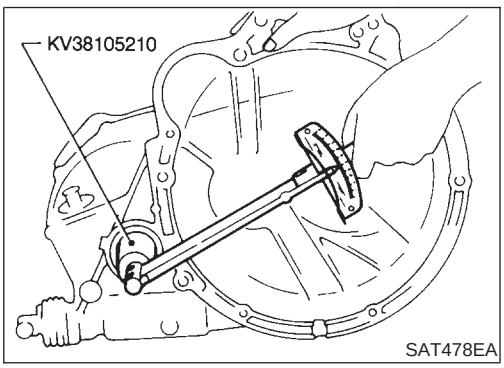

23. Measure total turning torque.

    Total turning torque (New bearing):

    8.8 - 21.6 N·m (90 - 220 kg-cm, 78 - 191 in-lb)
- **When old bearing is used again, preload will be slightly less than the above. Make sure torque is close to the specified range.**

General Specifications

NLMT0076

TRANSAXLE

NLMT0076S01

Applied model			QG18DE	
Model code number			8E009	8E069
Transaxle model			RS5F70A	
Number of speeds			5	
Synchromesh type			Warner	
Shift pattern				
Gear ratio	1st		3.333	
	2nd		1.955	
	3rd		1.286	
	4th		0.926	
	5th		0.733	
	Reverse		3.214	
Number of teeth	Input gear	1st	15	
		2nd	22	
		3rd	28	
		4th	41	
		5th	45	
		Rev.	14	
	Main gear	1st	50	
		2nd	43	
		3rd	36	
		4th	38	
		5th	33	
		Rev.	45	
	Reverse idler gear		37	
Oil capacity ℓ (Imp pt)			3.0 (5-1/4)	
Oil level (Reference data) mm (in)			56.5 - 61.0 (2.224 - 2.402)	
Remarks			1st & 2nd double baulk ring type synchronizer	
			Reverse sub-gear	

FINAL GEAR

NLMT0076S02

Engine		QG18DE
Transaxle model		RS5F70A
Final gear ratio		4.437
Number of teeth	Final gear/Pinion	71/16
	Side gear/Pinion mate gear	14/10

Gear End Play

NLMT0077

Unit: mm (in)

Gear	End play
1st main gear	0.18 - 0.31 (0.0071 - 0.0122)
2nd main gear	
5th main gear	
Reverse main gear	
3rd input gear	
4th input gear	0.17 - 0.44 (0.0067 - 0.0173)

Clearance Coupling Sleeve

NLMT0094

1ST, 2ND, 3RD, 4TH, 5TH & REVERSE COUPLING SLEEVE

NLMT0094S01

Coupling sleeve	Length “L”
1st & 2nd	0 - 0.68 mm (0 - 0.0268 in)
3rd & 4th	0 - 0.95 mm (0 - 0.0374 in)
5th & Reverse	0 - 0.89 mm (0 - 0.0350 in)

Clearance Between Baulk Ring and Gear

NLMT0078

3RD, 4TH, 5TH, REVERSE BAULK RING

NLMT0078S01

Unit: mm (in)

Standard		Wear limit
3rd	0.90 - 1.45 (0.0354 - 0.0571)	0.7 (0.028)
4th		
5th		
Reverse	0.9 - 1.35 (0.0354 - 0.0531)	

1ST AND 2ND DOUBLE BAULK RING

NLMT0078S02

Unit: mm (in)

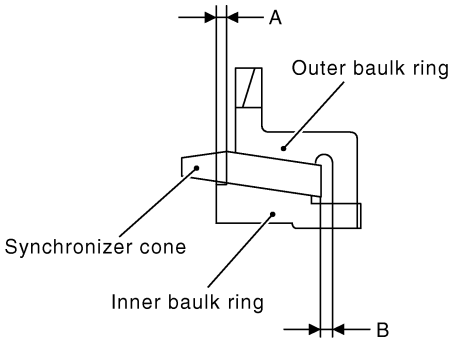

SMT906D

Dimension	Standard	Wear limit
A	0.6 - 0.8 (0.024 - 0.031)	0.2 (0.008)
B	0.6 - 1.1 (0.024 - 0.043)	

Available Snap Rings

NLMT0079

SNAP RING

NLMT0079S01

End play	0.05 - 0.25 mm (0.0020 - 0.0098 in)
Thickness mm (in)	Part number*
1.45 (0.0571)	32204-6J000
1.55 (0.0610)	32204-6J001
1.65 (0.0650)	32204-6J002
1.75 (0.0689)	32204-6J003
1.85 (0.0728)	32204-6J004

*: Always check with the parts department for the latest information.

Available C-rings

NLMT0080

4TH INPUT GEAR C-RING

NLMT0080S01

End play	0 - 0.06 mm (0 - 0.0024 in)
Thickness mm (in)	Part number*
3.00 (0.1181)	32205-6J000
3.03 (0.1193)	32205-6J001
3.06 (0.1205)	32205-6J002
3.09 (0.1217)	32205-6J003
3.12 (0.1228)	32205-6J004

*: Always check with the parts department for the latest information.

5TH INPUT GEAR REAR C-RING

NLMT0080S02

End play	0 - 0.06 mm (0 - 0.0024 in)
Thickness mm (in)	Part number*
2.59 (0.1020)	32205-6J005
2.62 (0.1031)	32205-6J006
2.65 (0.1043)	32205-6J007
2.68 (0.1055)	32205-6J008
2.71 (0.1067)	32205-6J009
2.74 (0.1079)	32205-6J010

*: Always check with the parts department for the latest information.

Available C-rings (Cont'd)

MAINSHAFT C-RING

NLMT0080S03

End play	0 - 0.06 mm (0 - 0.0024 in)
Thickness mm (in)	Part number*
3.48 (0.1370)	32348-6J000
3.51 (0.1382)	32348-6J001
3.54 (0.1394)	32348-6J002
3.57 (0.1406)	32348-6J003
3.60 (0.1417)	32348-6J004
3.63 (0.1429)	32348-6J005
3.66 (0.1441)	32348-6J006
3.69 (0.1453)	32348-6J007
3.72 (0.1465)	32348-6J008
3.75 (0.1476)	32348-6J009
3.78 (0.1488)	32348-6J010
3.81 (0.1500)	32348-6J011
3.84 (0.1512)	32348-6J012
3.87 (0.1524)	32348-6J013
3.90 (0.1535)	32348-6J014
3.93 (0.1547)	32348-6J015
3.96 (0.1559)	32348-6J016

*: Always check with the parts department for the latest information.

Available Adjusting Shims

NLMT0081

INPUT SHAFT REAR BEARING ADJUSTING SHIM

NLMT0081S01

End play	0 - 0.06 mm (0 - 0.0024 in)
Thickness mm (in)	Part number*
0.74 (0.0291)	32225-6J003
0.78 (0.0307)	32225-6J004
0.82 (0.0323)	32225-6J005
0.86 (0.0339)	32225-6J006
0.90 (0.0354)	32225-6J007
0.94 (0.0370)	32225-6J008
0.98 (0.0386)	32225-6J009
1.02 (0.0402)	32225-6J010
1.06 (0.0417)	32225-6J011
1.10 (0.0433)	32225-6J012
1.14 (0.0449)	32225-6J013
1.18 (0.0465)	32225-6J014
1.22 (0.0480)	32225-6J015
1.26 (0.0496)	32225-6J016
1.30 (0.0512)	32225-6J017
1.34 (0.0528)	32225-6J018
1.38 (0.0543)	32225-6J019
1.42 (0.0559)	32225-6J020
1.46 (0.0575)	32225-6J021
1.50 (0.0591)	32225-6J022
1.54 (0.0606)	32225-6J023
1.58 (0.0622)	32225-6J024
1.62 (0.0638)	32225-6J060
1.66 (0.0654)	32225-6J061

*: Always check with the parts department for the latest information.

MAINSHAFT ADJUSTING SHIM

NLMT0081S02

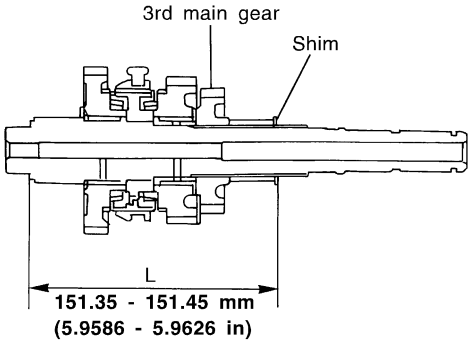

SMT907D

Standard length "L"	151.35 - 151.45 mm (5.9586 - 5.9626 in)
Thickness mm (in)	Part number*
0.48 (0.0189)	32238-6J000
0.56 (0.0220)	32238-6J001
0.64 (0.0252)	32238-6J002
0.72 (0.0283)	32238-6J003
0.80 (0.0315)	32238-6J004
0.88 (0.0346)	32238-6J005

*: Always check with the parts department for the latest information.

MAINSHAFT REAR BEARING ADJUSTING SHIM

NLMT0081S03

End play	0 - 0.06 mm (0 - 0.0024 in)
Thickness mm (in)	Part number*
2.99 (0.1177)	32238-6J010
3.03 (0.1193)	32238-6J011
3.07 (0.1209)	32238-6J012
3.11 (0.1224)	32238-6J013
3.15 (0.1240)	32238-6J014
3.19 (0.1256)	32238-6J015
3.23 (0.1272)	32238-6J016
3.27 (0.1287)	32238-6J017
3.31 (0.1303)	32238-6J018
3.35 (0.1319)	32238-6J019
3.39 (0.1335)	32238-6J020
3.43 (0.1350)	32238-6J021
3.47 (0.1366)	32238-6J022
3.51 (0.1382)	32238-6J023

*: Always check with the parts department for the latest information.

Available Thrust Washer

NLMT0082

MAINSHAFT THRUST WASHER

NLMT0082S01

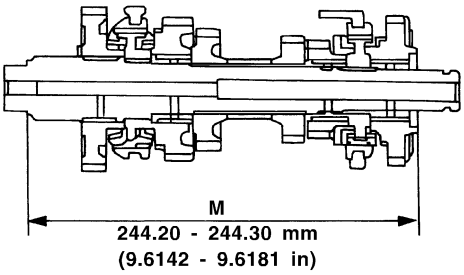

SMT843D

Standard length “M”	244.20 - 244.30 mm (9.6142 - 9.6181 in)
Thickness mm (in)	Part number*
6.04 (0.2378)	32246-6J000
6.12 (0.2409)	32246-6J001
6.20 (0.2441)	32246-6J002
6.28 (0.2472)	32246-6J003
6.36 (0.2504)	32246-6J004

*: Always check with the parts department for the latest information.

Available Washers

NLMT0083

DIFFERENTIAL SIDE GEAR THRUST WASHER

NLMT0083S01

Clearance between side gear and differential case	0.1 - 0.2 mm (0.004 - 0.008 in)
Thickness mm (in)	Part number*
0.75 - 0.80 (0.0295 - 0.0315)	38424-D2111
0.80 - 0.85 (0.0315 - 0.0335)	38424-D2112
0.85 - 0.90 (0.0335 - 0.0354)	38424-D2113
0.90 - 0.95 (0.0354 - 0.0374)	38424-D2114
0.95 - 1.00 (0.0374 - 0.0394)	38424-D2115

*: Always check with the parts department for the latest information.

Available Shims — Differential Side Bearing Preload and Adjusting Shim

=NLMT0084

BEARING PRELOAD

NLMT0084S01

Unit: mm (in)

Differential side bearing preload: T*	0.15 - 0.21 (0.0059 - 0.0083)

*: Install shims which are “deflection of differential case” + “T” in thickness.

DIFFERENTIAL SIDE BEARING ADJUSTING SHIMS

NLMT0084S02

Thickness mm (in)	Part number*
0.44 (0.0173)	38454-M8000
0.48 (0.0189)	38454-M8001
0.52 (0.0205)	38454-M8002
0.56 (0.0220)	38454-M8003
0.60 (0.0236)	38454-M8004
0.64 (0.0252)	38454-M8005
0.68 (0.0268)	38454-M8006
0.72 (0.0283)	38454-M8007
0.76 (0.0299)	38454-M8008
0.80 (0.0315)	38454-M8009
0.84 (0.0331)	38454-M8010
0.88 (0.0346)	38454-M8011

*: Always check with the parts department for the latest information.

General Specifications

NLMT0024

TRANSAXLE

NLMT0024S01

Applied model			YD22DDTi
Model code number			4U107
Transaxle model			RS5F50A
Number of speeds			5
Synchromesh type			Warner
Shift pattern			
Gear ratio	1st		3.400
	2nd		1.955
	3rd		1.206
	4th		0.829
	5th		0.641
	Reverse		3.428
Number of teeth	Input gear	1st	15
		2nd	22
		3rd	29
		4th	47
		5th	53
		Rev.	14
	Main gear	1st	51
		2nd	32
		3rd	35
		4th	39
		5th	34
		Rev.	48
	Reverse idler gear		29
Oil capacity ℓ (Imp pt)			4.5 - 4.8 (7-7/8 - 8-1/2)
Remarks			1st & 2nd double baulk ring type synchronizer

FINAL GEAR

NLMT0024S02

Engine		YD22DDT
Transaxle model		RS5F50A
Final gear ratio		3.823
Number of teeth	Final gear/Pinion	65/17
	Side gear/Pinion	14/10

Gear End Play

NLMT0025

Unit: mm (in)

Gear	End play
1st main gear	0.23 - 0.43 (0.0091 - 0.0169)
2nd main gear	0.23 - 0.58 (0.0091 - 0.0228)
3rd input gear	0.23 - 0.43 (0.0091 - 0.0169)
4th input gear	0.25 - 0.55 (0.0098 - 0.0217)
5th input gear	0.23 - 0.48 (0.0091 - 0.0189)

Clearance Between Baulk Ring and Gear

NLMT0026

3RD, 4TH & 5TH BAULK RING

NLMT0026S01

Unit: mm (in)

Gear	Standard	Wear limit
3rd, 4th & 5th	1.0 - 1.35 (0.0394 - 0.0531)	0.7 (0.028)

1ST AND 2ND DOUBLE BAULK RING

NLMT0026S02

Unit: mm (in)

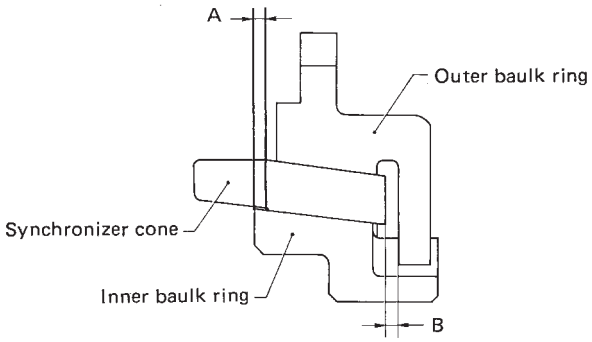

SMT806B

Dimension	Standard	Wear limit
A	0.6 - 0.8 (0.024 - 0.031)	0.2 (0.008)
B	0.6 - 1.1 (0.024 - 0.043)	

REVERSE BAULK RING

NLMT0026S03

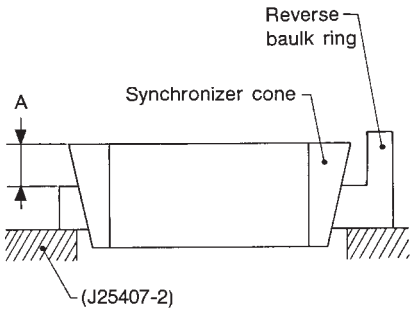

SMT581B

Dimension	Wear limit
A	1.2 mm (0.047 in)

Available Snap Rings

=NLMT0027

1ST & 2ND SYNCHRONIZER HUB (AT MAINSHAFT)

NLMT0027S01

Allowable clearance	0 - 0.1 mm (0 - 0.004 in)
Thickness mm (in)	Part number*
1.95 (0.0768)	32269-03E03
2.00 (0.0787)	32269-03E00
2.05 (0.0807)	32269-03E01
2.10 (0.0827)	32269-03E02

*: Always check with the Parts Department for the latest parts information.

3RD & 4TH SYNCHRONIZER HUB (AT INPUT SHAFT)

NLMT0027S02

Allowable clearance	0 - 0.1 mm (0 - 0.004 in)
Thickness mm (in)	Part number*
1.95 (0.0768)	32269-03E03
2.00 (0.0787)	32269-03E00
2.05 (0.0807)	32269-03E01
2.10 (0.0827)	32269-03E02

*: Always check with the Parts Department for the latest parts information.

5TH MAIN GEAR (AT MAINSHAFT)

NLMT0027S03

Allowable clearance	0 - 0.15 mm (0 - 0.0059 in)
Thickness mm (in)	Part number*
1.95 (0.0768)	32348-05E00
2.05 (0.0807)	32348-05E01
2.15 (0.0846)	32348-05E02
2.25 (0.0886)	32348-05E03

*: Always check with the Parts Department for the latest parts information.

Available Thrust Washer

NLMT0028

4TH INPUT GEAR (AT INPUT SHAFT)

NLMT0028S01

Allowable clearance	0 - 0.06 mm (0 - 0.0024 in)
Thickness mm (in)	Part number*
4.500 (0.1772)	32278-03E01
4.525 (0.1781)	32278-03E02
4.550 (0.1791)	32278-03E03
4.575 (0.1801)	32278-03E04

*: Always check with the Parts Department for the latest parts information.

DIFFERENTIAL SIDE GEAR THRUST WASHER

NLMT0028S02

Allowable clearance between side gear and differential case with washer	0.1 - 0.2 mm (0.004 - 0.008 in)
Thickness mm (in)	Part number*
0.75 - 0.80 (0.0295 - 0.0315)	38424-E3020
0.80 - 0.85 (0.0315 - 0.0335)	38424-E3021
0.85 - 0.90 (0.0335 - 0.0354)	38424-E3022
0.90 - 0.95 (0.0354 - 0.0374)	38424-E3023

*: Always check with the Parts Department for the latest parts information.

Available Shims

=NLMT0029

— INPUT SHAFT END PLAY AND MAINSHAFT AND DIFFERENTIAL SIDE BEARING PRELOAD AND ADJUSTING SHIM

BEARING PRELOAD AND END PLAY

NLMT0029S01

Unit: mm (in)

Mainshaft bearing preload	0.06 - 0.11 (0.0024 - 0.0043)
Input shaft end play	0 - 0.05 (0 - 0.0020)
Differential side bearing preload	0.40 - 0.45 (0.0157 - 0.0177)

TOTAL TURNING TORQUE (NEW BEARING)

NLMT0029S02

Unit: N·m (kg-cm, in-lb)

Total turning torque (new bearing)	8.8 - 21.6 (90 - 220, 78 - 191)

MAINSHAFT BEARING ADJUSTING SHIM

NLMT0029S03

Thickness mm (in)	Part number*
0.40 (0.0157)	32139-03E11
0.44 (0.0173)	32139-03E00
0.48 (0.0189)	32139-03E01
0.52 (0.0205)	32139-03E12
0.56 (0.0220)	32139-03E02
0.60 (0.0236)	32139-03E03
0.64 (0.0252)	32139-03E04
0.68 (0.0268)	32139-03E05
0.72 (0.0283)	32139-03E06
0.76 (0.0299)	32139-03E07
0.80 (0.0315)	32139-03E08
1.20 (0.0472)	32139-03E13

*: Always check with the Parts Department for the latest parts information.

TABLE FOR SELECTING MAINSHAFT BEARING ADJUSTING SHIM(S)

NLMT0029S04

Unit: mm (in)

Dimension “C”	Suitable shim(s)
0.30 - 0.34 (0.0118 - 0.0134)	0.40 (0.0157)
0.34 - 0.38 (0.0134 - 0.0150)	0.44 (0.0173)
0.38 - 0.42 (0.0150 - 0.0165)	0.48 (0.0189)
0.42 - 0.46 (0.0165 - 0.0181)	0.52 (0.0205)
0.46 - 0.50 (0.0181 - 0.0197)	0.56 (0.0220)
0.50 - 0.54 (0.0197 - 0.0213)	0.60 (0.0236)
0.54 - 0.58 (0.0213 - 0.0228)	0.64 (0.0252)
0.58 - 0.62 (0.0228 - 0.0244)	0.68 (0.0268)
0.62 - 0.66 (0.0244 - 0.0260)	0.72 (0.0283)
0.66 - 0.70 (0.0260 - 0.0276)	0.76 (0.0299)
0.70 - 0.74 (0.0276 - 0.0291)	0.80 (0.0315)
0.74 - 0.78 (0.0291 - 0.0307)	0.40 + 0.44 (0.0157 + 0.0173)
0.78 - 0.82 (0.0307 - 0.0323)	0.44 + 0.44 (0.0173 + 0.0173)
0.82 - 0.86 (0.0323 - 0.0339)	0.44 + 0.48 (0.0173 + 0.0189)
0.86 - 0.90 (0.0339 - 0.0354)	0.48 + 0.48 (0.0189 + 0.0189)
0.90 - 0.94 (0.0354 - 0.0370)	0.48 + 0.52 (0.0189 + 0.0205)
0.94 - 0.98 (0.0370 - 0.0386)	0.52 + 0.52 (0.0205 + 0.0205)
0.98 - 1.02 (0.0386 - 0.0402)	0.52 + 0.56 (0.0205 + 0.0220)
1.02 - 1.06 (0.0402 - 0.0417)	0.56 + 0.56 (0.0220 + 0.0220)
1.06 - 1.10 (0.0417 - 0.0433)	0.56 + 0.60 (0.0220 + 0.0236)
1.10 - 1.14 (0.0433 - 0.0449)	0.60 + 0.60 (0.0236 + 0.0236)
1.14 - 1.18 (0.0449 - 0.0465)	0.60 + 0.64 (0.0236 + 0.0252)
1.18 - 1.22 (0.0465 - 0.0480)	0.64 + 0.64 (0.0252 + 0.0252)
1.22 - 1.26 (0.0480 - 0.0496)	0.64 + 0.68 (0.0252 + 0.0268)
1.26 - 1.30 (0.0496 - 0.0512)	0.68 + 0.68 (0.0268 + 0.0268)
1.30 - 1.34 (0.0512 - 0.0528)	0.68 + 0.72 (0.0268 + 0.0283)
1.34 - 1.38 (0.0528 - 0.0543)	0.72 + 0.72 (0.0283 + 0.0283)
1.38 - 1.42 (0.0543 - 0.0559)	0.72 + 0.76 (0.0283 + 0.0299)
1.42 - 1.46 (0.0559 - 0.0575)	0.76 + 0.76 (0.0299 + 0.0299)
1.46 - 1.50 (0.0575 - 0.0591)	0.76 + 0.80 (0.0299 + 0.0315)

INPUT SHAFT BEARING ADJUSTING SHIM

NLMT0029S05

Thickness mm (in)	Part number*
0.40 (0.0157)	32225-08E00
0.44 (0.0173)	32225-08E01
0.48 (0.0189)	32225-08E02
0.52 (0.0205)	32225-08E03
0.56 (0.0220)	32225-08E04
0.60 (0.0236)	32225-08E05
0.64 (0.0252)	32225-08E06
0.68 (0.0268)	32225-08E07
0.72 (0.0283)	32225-08E08
0.76 (0.0299)	32225-08E09
0.80 (0.0315)	32225-08E10
1.20 (0.0472)	32225-08E11

*: Always check with the Parts Department for the latest parts information.

TABLE FOR SELECTING INPUT SHAFT BEARING ADJUSTING SHIM(S)

NLMT0029S06

Unit: mm (in)

Dial indicator indication	Suitable shim(s)
0.65 - 0.69 (0.0256 - 0.0272)	0.64 (0.0252)
0.69 - 0.73 (0.0272 - 0.0287)	0.68 (0.0268)
0.73 - 0.77 (0.0287 - 0.0303)	0.72 (0.0283)
0.77 - 0.81 (0.0303 - 0.0319)	0.76 (0.0299)
0.81 - 0.85 (0.0319 - 0.0335)	0.80 (0.0315)
0.85 - 0.89 (0.0335 - 0.0350)	0.40 + 0.44 (0.0157 + 0.0173)
0.89 - 0.93 (0.0350 - 0.0366)	0.44 + 0.44 (0.0173 + 0.0173)
0.93 - 0.97 (0.0366 - 0.0382)	0.44 + 0.48 (0.0173 + 0.0189)
0.97 - 1.01 (0.0382 - 0.0398)	0.48 + 0.48 (0.0189 + 0.0189)
1.01 - 1.05 (0.0398 - 0.0413)	0.48 + 0.52 (0.0189 + 0.0205)
1.05 - 1.09 (0.0413 - 0.0429)	0.52 + 0.52 (0.0205 + 0.0205)
1.09 - 1.13 (0.0429 - 0.0445)	0.52 + 0.56 (0.0205 + 0.0220)
1.13 - 1.17 (0.0445 - 0.0461)	0.56 + 0.56 (0.0220 + 0.0220)
1.17 - 1.21 (0.0461 - 0.0476)	0.56 + 0.60 (0.0220 + 0.0236)
1.21 - 1.25 (0.0476 - 0.0492)	0.60 + 0.60 (0.0236 + 0.0236)
1.25 - 1.29 (0.0492 - 0.0508)	0.60 + 0.64 (0.0236 + 0.0252)
1.29 - 1.33 (0.0508 - 0.0524)	0.64 + 0.64 (0.0252 + 0.0252)
1.33 - 1.37 (0.0524 - 0.0539)	0.64 + 0.68 (0.0252 + 0.0268)
1.37 - 1.41 (0.0539 - 0.0555)	0.68 + 0.68 (0.0268 + 0.0268)
1.41 - 1.45 (0.0555 - 0.0571)	0.68 + 0.72 (0.0268 + 0.0283)
1.45 - 1.49 (0.0571 - 0.0587)	0.72 + 0.72 (0.0283 + 0.0283)
1.49 - 1.53 (0.0587 - 0.0602)	0.72 + 0.76 (0.0283 + 0.0299)
1.53 - 1.57 (0.0602 - 0.0618)	0.76 + 0.76 (0.0299 + 0.0299)
1.57 - 1.61 (0.0618 - 0.0634)	0.76 + 0.80 (0.0299 + 0.0315)
1.61 - 1.65 (0.0634 - 0.0650)	0.80 + 0.80 (0.0315 + 0.0315)
1.65 - 1.69 (0.0650 - 0.0665)	0.44 + 1.20 (0.0173 + 0.0472)

DIFFERENTIAL SIDE BEARING ADJUSTING SHIM

NLMT0029S07

Thickness mm (in)	Part number*
0.40 (0.0157)	38453-96E00
0.44 (0.0173)	38453-96E01
0.48 (0.0189)	38453-96E02
0.52 (0.0205)	38453-96E03
0.56 (0.0220)	38453-96E04
0.60 (0.0236)	38453-96E05
0.64 (0.0252)	38453-96E06
0.68 (0.0268)	38453-96E07
0.72 (0.0283)	38453-96E08
0.76 (0.0299)	38453-96E09
0.80 (0.0315)	38453-96E10
0.84 (0.0331)	38453-96E11
0.88 (0.0346)	38453-96E12
1.20 (0.0472)	38453-96E13

*: Always check with the Parts Department for the latest parts information.

Available Shims (Cont'd)

TABLE FOR SELECTING DIFFERENTIAL SIDE BEARING ADJUSTING SHIM(S)

=NLMT0029S08

Unit: mm (in)

Dial indicator deflection	Suitable shim(s)
0.47 - 0.51 (0.0185 - 0.0201)	0.44 + 0.48 (0.0173 + 0.0189)
0.51 - 0.55 (0.0201 - 0.0217)	0.48 + 0.48 (0.0189 + 0.0189)
0.55 - 0.59 (0.0217 - 0.0232)	0.48 + 0.52 (0.0189 + 0.0205)
0.59 - 0.63 (0.0232 - 0.0248)	0.52 + 0.52 (0.0205 + 0.0205)
0.63 - 0.67 (0.0248 - 0.0264)	0.52 + 0.56 (0.0205 + 0.0220)
0.67 - 0.71 (0.0264 - 0.0280)	0.56 + 0.56 (0.0220 + 0.0220)
0.71 - 0.75 (0.0280 - 0.0295)	0.56 + 0.60 (0.0220 + 0.0236)
0.75 - 0.79 (0.0295 - 0.0311)	0.60 + 0.60 (0.0236 + 0.0236)
0.79 - 0.83 (0.0311 - 0.0327)	0.60 + 0.64 (0.0236 + 0.0252)
0.83 - 0.87 (0.0327 - 0.0343)	0.64 + 0.64 (0.0252 + 0.0252)
0.87 - 0.91 (0.0343 - 0.0358)	0.64 + 0.68 (0.0252 + 0.0268)
0.91 - 0.95 (0.0358 - 0.0374)	0.68 + 0.68 (0.0268 + 0.0268)
0.95 - 0.99 (0.0374 - 0.0390)	0.68 + 0.72 (0.0268 + 0.0283)
0.99 - 1.03 (0.0390 - 0.0406)	0.72 + 0.72 (0.0283 + 0.0283)
1.03 - 1.07 (0.0406 - 0.0421)	0.72 + 0.76 (0.0283 + 0.0299)
1.07 - 1.11 (0.0421 - 0.0437)	0.76 + 0.76 (0.0299 + 0.0299)
1.11 - 1.15 (0.0437 - 0.0453)	0.76 + 0.80 (0.0299 + 0.0315)
1.15 - 1.19 (0.0453 - 0.0469)	0.80 + 0.80 (0.0315 + 0.0315)
1.19 - 1.23 (0.0469 - 0.0484)	0.44 + 1.20 (0.0173 + 0.0472)
1.23 - 1.27 (0.0484 - 0.0500)	0.48 + 1.20 (0.0189 + 0.0472)
1.27 - 1.31 (0.0500 - 0.0516)	0.52 + 1.20 (0.0205 + 0.0472)